SIEMENS

Catalog
HG 11.03 ·
Edition 2018

3AH3 Vacuum Circuit-Breakers

Medium-Voltage Equipment

siemens.com/3AH3

R-HG11-373.tif

3AH3 Vacuum Circuit-Breakers

Medium-Voltage Equipment
Catalog HG 11.03 · 2018

Invalid:
Catalog HG 11.03 · 2010

Contents | Page

Description 5 — 1
- General 6
- Construction and mode of operation, standards, maintenance-free design 7
- Ambient conditions, current carrying capacity, dielectric strength 9
- Basic equipment and product range overview 10
- The three-circuit-breaker-solution for "phase-segregated" design 12

Equipment Selection 13 — 2
- Order number structure and configuration example 14
- Selection of basic types, high-current circuit-breakers (circuit-breakers according to IEC 62271-100) 15
- Selection of basic types, generator circuit-breakers according to IEC/IEEE 62271-37-013 18
- Selection of secondary equipment 19
- Selection of additional equipment 27
- Accessories and spare parts 29

Technical Data 33 — 3
- Electrical data, dimensions, weights and dimension drawings circuit-breakers according to IEC 62271-100 34
- Electrical data, dimensions, weights and dimension drawings high-current and generator circuit-breakers according to IEC/IEEE 62271-37-013 46
- Circuit diagrams 50
- Operating times, short-circuit protection of motors, consumption data of releases 52

Annex 53 — 4
- Inquiry form 54
- Configuration instructions 55
- Configuration aid Foldout page

MANAGEMENT SYSTEM CERTIFICATION
DNV·GL
ISO 9001 = ISO 14001
OHSAS 18001

The products and systems described in this catalog are manufactured and sold according to a certified management system (acc. to ISO 9001, ISO 14001 and BS OHSAS 18001).

R-HG11-357.tif

R-HG11-174.tif

Industrial application: Refinery

Contents Page

Description 5

General 6

Construction and mode of operation 7
Switching medium 7
Pole assemblies 7
Operating mechanism box 7
Operating mechanism 7
Trip-free mechanism 7
Releases 8
Closing 8
Circuit-breaker tripping signal 8
Interlocking 8

Standards 8

Maintenance-free design 8

Ambient conditions, current carrying capacity and dielectric strength 9

Basic equipment and product range overview 10

The three-circuit-breaker-solution for "phase-segregated" design 12

1

1

3AH3 vacuum circuit-breaker from 7.2 kV to 36 kV – The Powerful

Circuit-breakers must make and break all currents within the scope of their ratings: From small inductive and capacitive load currents up to high short-circuit currents, controlling all fault conditions in the power system at the same time.

3AH3 – maintenance-free for high switching capacities

R-HG11-204.tif

3AH3 6/7/8 – especially developed for generator applications

R_HG11_218.tif

The 3AH3 vacuum circuit-breaker is maintenance-free throughout its entire service life. It is extremely powerful and controls up to 10,000 operating cycles. This circuit-breaker is used, for example in industrial applications with high load currents up to 6300 A and high short-circuit currents up to 72 kA, covering the usual medium-voltage range from 7.2 to 40.5 kV.

Due to its high performance, the circuit-breaker is also perfectly suitable for generator operation. For this purpose, these generator circuit-breakers are not only subjected to the basic type tests according to IEC 62271-100, but also to the additional tests according to IEC/IEEE 62271-37-013. This international standard takes into account the increased requirements to which equipment is subjected when switching generators. As a result, it has also become the leading standard for generator circuit-breakers in IEC-oriented professional circles.

Standard IEC/IEEE 62271-37-013 includes in particular:

- For generator-supplied faults: High DC components and the resulting missing current zeros
- For system-supplied faults: Higher TRV rates of rise
- Higher test voltage levels.

For connection of larger generators, so-called "phase-segregated" generator switchgear is used, in which the single phases are accommodated in separate enclosures. For this application, generator circuit-breakers are equipped, tested and adjusted for parallel operation. In this way, even higher short-circuit currents up to 90 kA and normal currents up to 12,000 A can be switched.

The vacuum circuit-breaker consists of the pole assemblies (1) and the operating mechanism box (2). The pole assemblies are fixed to the operating mechanism box via post insulators (3). The switching movement is transferred by means of operating rods (4) and levers.

Switching medium

The vacuum switching technology, proven and fully developed for more than 40 years, serves as arc-quenching principle by using vacuum interrupters.

Pole assemblies

The pole assemblies consist of the vacuum interrupters (6) and the interrupter supports. The vacuum interrupters are air-insulated and freely accessible. This makes it possible to clean the insulating parts easily in adverse ambient conditions. The vacuum interrupter is mounted rigidly to the upper interrupter support (5). The lower part of the interrupter is guided in the lower interrupter support (7), allowing axial movement. The braces absorb the external forces resulting from switching operations and the contact pressure.

Operating mechanism box

The whole operating mechanism with releases, auxiliary switches, indicators and actuating devices is accommodated in the operating mechanism box. The extent of the secondary equipment depends on the case of application and offers a multiple variety of options in order to meet almost every requirement.

Operating mechanism

The operating mechanism is a stored-energy mechanism. The closing spring is charged either electrically or manually. It latches tight at the end of the charging process and serves as an energy store. The force is transmitted from the operating mechanism to the pole assemblies via operating rods.

To close the breaker, the closing spring can be unlatched either mechanically by means of the local “ON” pushbutton or electrically by remote control. The closing spring charges the opening or contact pressure springs as the breaker closes. The now discharged closing spring will be charged again automatically by the mechanism motor or manually. Then the operating sequence OPEN-CLOSE-OPEN is stored in the springs. The charging state of the closing spring can be checked electrically by means of a position switch.

Trip-free mechanism

3AH3 vacuum circuit-breakers have a trip-free mechanism according to IEC 62271-100. In the event of an opening command being given after a closing operation has been initiated, the moving contacts return to the open position and remain there even if the closing command is sustained. This means that the contacts of the vacuum circuit-breakers are momentarily in the closed position, which is permissible according to IEC 62271-100.

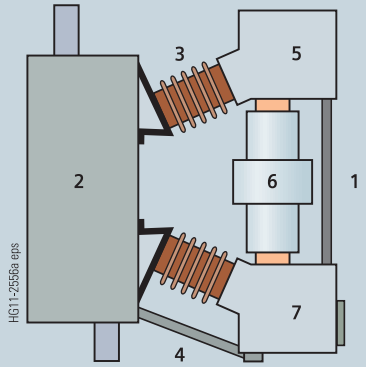

Circuit-breaker structure

1 Pole assembly
2 Operating mechanism box
3 Post insulator
4 Operating rod
5 Upper interrupter support
6 Vacuum interrupter
7 Lower interrupter support

Front view

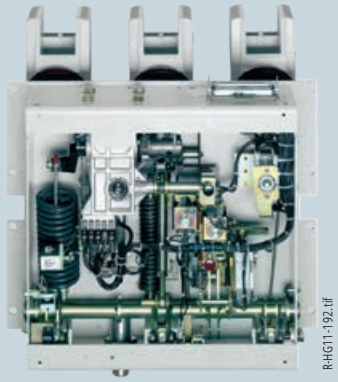

Open operating mechanism box

1

Releases

A release is a device which transfers electrical commands from an external source, such as a control room, to the latching mechanism of the vacuum circuit-breaker so that it can be opened or closed. Apart from the closing solenoid, the maximum possible equipment is one shunt release and two other releases. For release combinations, refer to page 19.

- The closing solenoid unlatches the charged closing spring of the vacuum circuit-breaker, closing it by electrical means. It is suitable for DC or AC voltage.
- Shunt releases are used for automatic tripping of vacuum circuit-breakers by suitable protection relays and for deliberate tripping by electrical means. They are intended for connection to an external power supply (DC or AC voltage) but, in special cases, may also be connected to a voltage transformer for manual operation.
- Current-transformer operated releases comprise a store-denergy mechanism, an unlatching mechanism and an electromagnetic system. They are used when there is no external source of auxiliary power (e.g. a battery). Tripping is effected by means of a protection relay (e.g. overcurrent-time protection) acting on the current-transformer operated release. When the tripping current is exceeded (= 90 % of the rated normal current of the c.t.-operated release), the latch of the energy store, and thus opening of the circuit-breaker, is released.
- Undervoltage releases comprise a stored-energy mechanism, an unlatching mechanism and an electromagnetic system which is permanently connected to the secondary or auxiliary voltage while the vacuum circuit-breaker is closed. If the voltage falls below a predetermined value, unlatching of the release is enabled and the circuit-breaker is opened via the stored-energy mechanism. The deliberate tripping of the undervoltage release generally takes place via an NC contact in the tripping circuit or via an NO contact by short-circuiting the magnet coil. With this type of tripping, the short-circuit current is limited by the built-in resistors. Undervoltage releases can also be connected to voltage transformers. When the operating voltage drops to impermissibly low levels, the circuit-breaker is tripped automatically. For delayed tripping, the undervoltage release can be combined with energy stores.

Closing

In the standard version, 3AH3 vacuum circuit-breakers can be remote-closed electrically. They can also be closed locally by mechanical unlatching of the closing spring via pushbutton. Instead of this “manual mechanical closing”, “manual electrical closing” is also available. In this version, the closing circuit of the circuit-breaker is controlled electrically by a pushbutton instead of the mechanical button. In this way, switchgear-related interlocks can also be considered for local operation in order to prevent involuntary closing.

If constant CLOSE and OPEN commands are present at the circuit-breaker at the same time, the circuit-breaker will return to the open position after closing. It remains in this position until a new CLOSE command is given. In this manner, continuous closing and opening (= “pumping”) is prevented.

Circuit-breaker tripping signal

The NO contact makes brief contact while the vacuum circuit-breaker is opening, and this is often used to operate a hazard-warning system which, however, is only allowed to respond to automatic tripping of the circuit-breaker. Therefore, the signal from the NO contact must be interrupted when the circuit-breaker is being opened intentionally. This is accomplished under local control with the cut-out switch that is connected in series with the NO contact.

Interlocking

Electrical interlocking

The circuit-breakers can be integrated in electromagnetic feeder or switchgear interlocks. In case of electrical interlocking, the disconnector or its operating mechanism is equipped with a magnetic lock-out mechanism. This mechanism is controlled by an auxiliary contact of the circuit-breaker, so that the disconnector can only be operated when the circuit-breaker is open. On the other hand, the circuit-breaker is also controlled by the disconnector or its operating mechanism, so that it can only be closed when the disconnector is in an end position. For this purpose, manual electrical closing must be provided in the circuit-breaker operating mechanism (see “Closing”).

Mechanical interlocking

To interlock circuit-breaker trucks, withdrawable parts or disconnectors according to the switch position, the circuit-breakers can be equipped with a mechanical interlocking. A sensor at the switchgear checks the position of the circuit-breaker and prevents the open circuit-breaker in a reliable way from being closed mechanically and electrically.

Standards

3AH3 circuit-breakers conform to the following standards:

- IEC 62271-100
- IEC 62271-1
- VDE 0671
- IEC/IEEE 62271-37-013:2015 (only generator circuit-breaker).

All 3AH3 vacuum circuit-breakers fulfil the endurance classes E2, M2, C2 and S1 according to IEC 62271-100.

Maintenance-free design

The 3AH3 vacuum circuit-breakers are maintenance-free:

- Under normal ambient conditions according to IEC 62271-1
- Up to 10,000 operating cycles,
  - no relubrication, no readjustment required
  - and within their tolerances, the characteristics are independent of the switching rate or of standing times without switching operations.

Ambient conditions

The vacuum circuit-breakers are designed for the normal operating conditions defined in IEC 62271-100.

Condensation can occasionally occur under the ambient conditions shown opposite. 3AH3 vacuum circuit-breakers are suitable for use in the following climatic classes according to IEC 60721, Part 3-3:

Climatic ambient conditions:	Class 3K4 [1]
Biological ambient conditions:	Class 3B1
Mechanical ambient conditions:	Class 3M2
Chemically-active substances:	Class 3C2 [2]
Mechanically-active substances:	Class 3S2 [3]

1) Low temperature limit: – 5 °C
2) Without icing and wind-driven precipitation
3) Restriction: Clean insulation parts

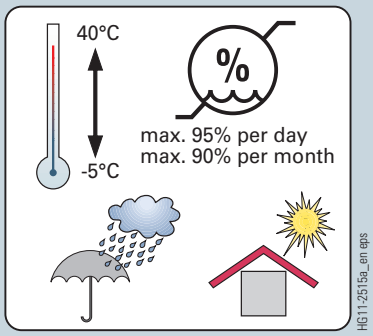

Current carrying capacity

The rated normal currents specified in the opposite diagram have been defined according to IEC 62271-100 for an ambient air temperature of + 40 °C and apply to open switchgear. For enclosed switchgear the data of the switchgear manufacturer applies. At ambient air temperatures below + 40 °C, higher normal currents can be carried (see diagram):

Characteristics curve **1** = Rated normal current 1250 A
Characteristics curve **2** = Rated normal current 2000 A
Characteristics curve **3** = Rated normal current 2500 A
Characteristics curve **4** = Rated normal current 3150 A
Characteristics curve **5** = Rated normal current 4000 A
Characteristics curve **6** = Rated normal current 5000 A
Characteristics curve **7** = Rated normal current 6300 A

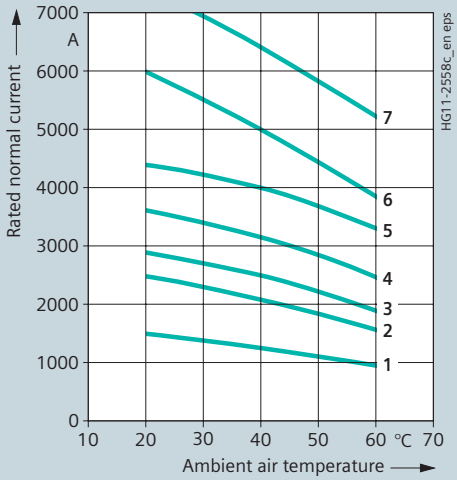

Dielectric strength

The dielectric strength of air insulation decreases with increasing altitude due to low air density. According to IEC 62271-1, the values of the rated lightning impulse withstand voltage and the rated short-duration power-frequency withstand voltage specified in the chapter "Technical Data" apply to a site altitude of 1000 m above sea level. For an altitude above 1000 m, the insulation level must be corrected according to the opposite diagram.

The characteristic shown applies to both rated withstand voltages.

To select the devices, the following applies:

$U \geq U_0 \times K_a$

U Rated withstand voltage under reference atmosphere
U_0 Rated withstand voltage requested for the place of installation
K_a Altitude correction factor according to the opposite diagram

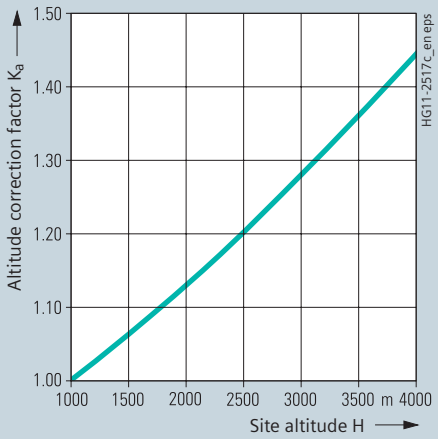

Example

For a requested rated lightning impulse withstand voltage of 75 kV at an altitude of 2500 m, an insulation level of 90 kV under reference atmosphere is required as a minimum:

90 kV ≥ 75 kV x 1.2

1

Basic equipment

Features	Minimum equipment	Alternative equipment	Remarks
Operating mechanism	Electrical operating mechanism (hand crank not included in the scope of supply)	Manual operating mechanism (hand crank included in the scope of supply)	Hand crank available as accessory
Closing	Closing solenoid and manual mechanical closing	Manual electrical closing	–
1st release	Shunt release	None	–
2nd release	Without	Shunt release, undervoltage release, c.t.-operated release	Max. 3 releases can be combined (for possible combinations, refer to page 19)
3rd release	Without	Shunt release, undervoltage release, c.t.-operated release	Max. 3 releases can be combined (for possible combinations, refer to page 19)
Varistor protection circuit	Generally installed for DC ≥ 60 V	None	For limiting switching overvoltages due to inductive loads
Auxiliary switch	6 NO + 6 NC	12 NO + 12 NC	–
Plug connector	24-pole terminal strip	24-pole plug, 64-pole plug	–
Anti-pumping	Available	None	–
Circuit-breaker tripping signal	Available	None	–
Operating cycle counter	Available	None	–
"Spring charged" signal and indication	Available	None	–
Interlocking	Without	Mechanical interlocking	

For the endurance class C2, all circuit-breakers fulfil the following values according to IEC 62271-100

	Line	Cable	Single capacitor bank	Back-to-back capacitor bank 1)	
Rated voltage U_r kV, r.m.s.	Rated line-charging breaking current I_l A, r.m.s.	Rated cable-charging breaking current I_c A, r.m.s.	Rated single capacitor bank breaking current 2) I_{sb} A, r.m.s.	Rated back-to-back capacitor bank breaking current I_{bb} A, r.m.s.	Frequency of the inrush current f_{bl} Hz
7.2	10	10	400	400	4250
12	10	25	400	400	4250
17.5	10	31.5	400	400	4250
24	10	31.5	400	400	4250
36	10	50	400	400	4250
40.5	10	50	400	400	4250

1) Rated back-to-back capacitor bank making current for a back-to-back capacitor bank – see chapter 3: Technical data

2) The capacitive switching capacity of the circuit-breaker is 0.7 x I_r above the standard specification

Product range overview for 3AH3 IEC high-current circuit-breakers

Rated voltage kV	Rated short-circuit breaking current kA	Rated normal current (A)													
		1250			2000		2500			3150			4000		
		Pole-centre distance (mm)													
		210	275	350	210	350	210	275	350	210	275	350	275	300	350
7.2	50	■			■		■			■			■		
	63		■					■			■		■		
12	50	■			■		■			■			■		
	63		■					■			■		■		
17.5	50	■			■		■			■			■		
	63		■					■			■		■		
24	40							■			■				
	50										■			■	
36	31.5			■		■			■			■			■
	40								■			■			■
40.5	31.5			■		■			■			■			■
	40								■			■			■

■ Available design

Vacuum circuit-breaker for generator switching applications according to IEC/IEEE 62271-37-013

Type tests as specified in IEC 62271-100 are performed as a rule for all Siemens circuit-breakers. The generator circuit-breakers are additionally tested according to IEC/IEEE 62271-37-013.

Standard IEC/IEEE 62271-37-013 includes in particular:

- For generator-supplied faults: High DC components and the resulting missing current zeroes
- For system-supplied faults: Higher TRV rates of rise
- Higher test voltage levels.

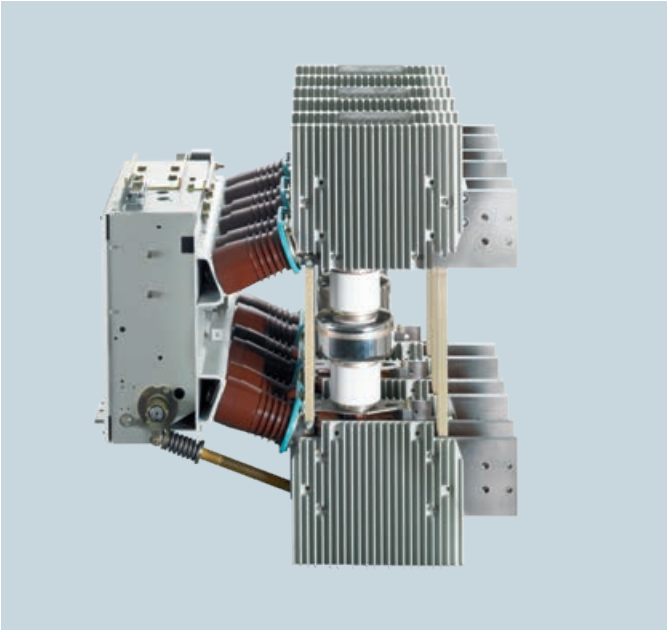

R_HG11_220.tif

3AH3 vacuum circuit-breaker

Product range overview for 3AH37/3AH38 high-current and generator circuit-breakers (acc. to IEC/IEEE 62271-37-013)

Rated voltage kV	Rated short-circuit breaking current kA	Rated normal current (A)				
		3150	4000	5000	6300	8000 forced cooling
17.5	50	■	■	○	○	○
	63	■	■	○	○	○
	72	■	■	○	○	○
24	50	○	○	○	○	○
	63	○	○	○	○	○
	72	○	○	○	○	○

■ PMA 275 mm
○ PMA 300 mm

1

The three-circuit-breaker-solution for "phase-segregated" design

For generator switchgear with segregated phases, one switching device is used per phase.

The requirements for the simultaneity of poles are implemented according to IEC 62271-100.

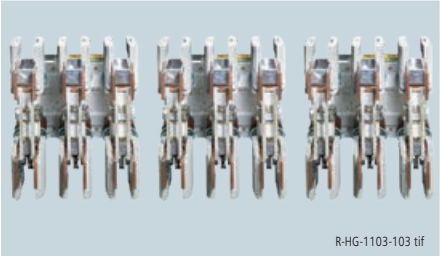
R-HG-1103-103 tif

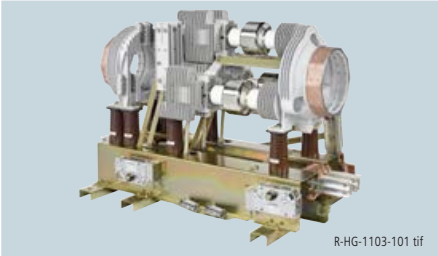
R-HG-1103-101 tif

Technical data for "phase-segregated" design		For the three-circuit-breaker-solution, three circuit-breakers are used which are optimized for interconnected operation.					Complete module with integrated disconnector, earthing switch and start-up disconnector for each phase	
Rated short-circuit breaking current I_{SC} (3s)	**[kA]**	**50**	**63**	**72**	**80**	**90**	**80**	**100**
DC component of the rated short-circuit breaking current	[%]	75	70	70	70	45	70	75
Asymmetrical breaking current	[kA]	73	89	101	113	107	113	146
Rated short-circuit making current	[kA]	137	173	197	219	247	219	274
Generator short-circuit breaking current $I_{SC\ gen}$	**[kA]**	**25**	**31.5**	**36**	**40**	**45**	**40**	**63**
DC component of the short-circuit breaking current	[%]	130	130	130	130	110	130	130
Asymmetrical breaking current	[kA]	52	66	75	84	83	84	132
Rated voltage								
17.5 kV (IEC/IEEE 62271-37-013) U_p = 110 kV, U_d = 50 kV		3AH3732	3AH3733	3AH3734	3AH3735	3AH3756	3AH3615	3AH3617
24 kV (IEC 62271, IEC/IEEE 62271-37-013) U_p = 125 kV, U_d = 60 kV		3AH3742	3AH3743	3AH3744	3AH3745		3AH3625	3AH3627
Rated normal currents	**[A]**	4000 to 12,500 (depending on version)						
Rated operating sequence								
– For short-circuit breaking current		CO – 30 min – CO, up to 30 short-circuit breaking operations						
– For normal current		O – 3 min – CO – 3 min – CO, up to 10,000 operating cycles						

U_p = Rated lightning impulse withstand voltage U_d = Rated short-duration power-frequency withstand voltage

For more detailed information on "Phase-segregated" design, we recommend the brochure "Vacuum Circuit-Breakers for Generator Switching Applications".

Please contact our Customer Support! Our experts will be pleased to assist you in finding the proper circuit-breaker for your generator switching application.

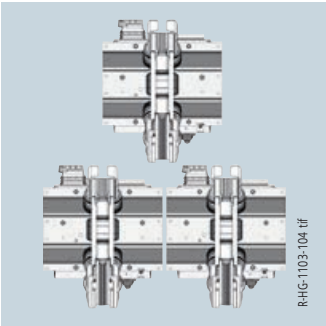
R-HG-1103-104 tif

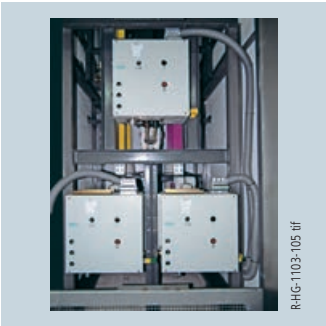
R-HG-1103-105 tif

R-HG-1103-102 tif

The version with one switching device per phase is highly beneficial especially for flexible operation in retrofit or modernization projects. Example for retrofit installation: Replacement of compressed-air generator circuit-breakers (6 kV – 86.5 kA – 3500 A).

With the generator switching module 3AH36, the HB3 is the world's first generator switchgear using vacuum switching technology rated up to 12,500 A, with natural cooling and 100 kA switching capacity, type-tested according to IEC/IEEE 62271-37-013 standard.

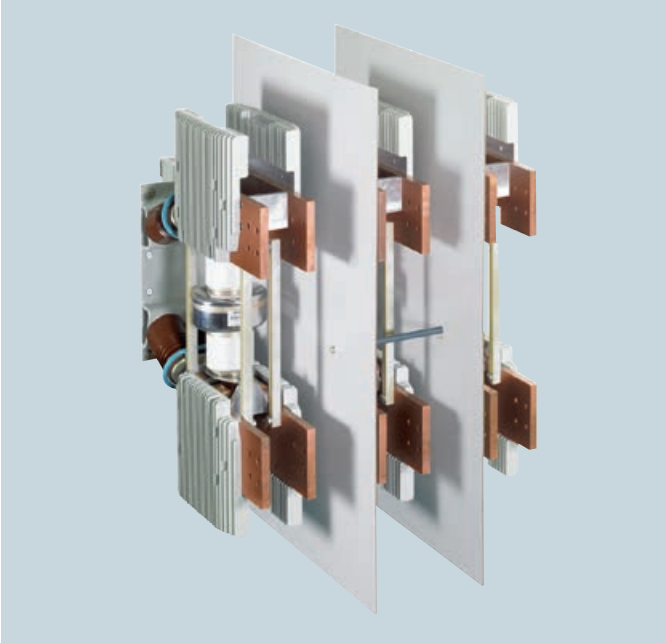

R-HG11-217.eps

3AH37 generator circuit-breaker

R-HG11-194.eps

3AH3 vacuum circuit-breaker (4000 A)

Contents | Page

Equipment Selection 13

Order number structure and configuration example 14

Selection of basic types, high-current circuit-breakers (circuit-breakers according to IEC 62271-100)
Voltage level 7.2 kV 15
Voltage level 12 kV 15
Voltage level 17.5 kV 16
Voltage level 24 kV 16
Voltage level 36 kV 17
Voltage level 40.5 kV 17

Selection of basic types, generator circuit-breakers according to IEC/IEEE 62271-37-013
Voltage level 17.5 kV Design Classic 18
Voltage level 24 kV Design Classic 18

Selection of secondary equipment
Release combination 19
Operating voltage of the closing solenoid 20
Operating voltage of the 1st shunt release 21
Operating voltage of the 2nd release 22
Operating voltage of the 3rd release 23
Operating voltage of the operating mechanism 24
Auxiliary switch, low-voltage interface, interlocking 25
Languages and frequency 26

Selection of additional equipment 27

Accessories and spare parts 29
Rating plate 29
Accessories catalog 30

2

Equipment Selection
Order number structure and configuration example

2

Order number structure

The 3AH3 vacuum circuit-breakers consist of a primary and a secondary part. The relevant data make up the 16-digit order number. The primary part covers the main electrical data of the circuit-breaker poles. The secondary part covers the auxiliary devices which are necessary for operating and controlling the vacuum circuit-breaker.

Order codes

Individual equipment versions, marked with "**9**" or "**Z**" in the 9th to 16th position, are explained more in detail by a 3-digit order code. Several order codes can be added to the order number in succession and in any sequence.

Special versions (★)

In case of special versions, "**-Z**" is added to the order number and a descriptive order code follows. If several special versions are required, the suffix "**-Z**" is listed only once. If a requested special version is not in the catalog and can therefore not be ordered via order code, it has to be identified with **Y 9 9** after consultation. The agreement hereto is made directly between your responsible sales partner and the order processing department at Siemens.

a: alphabetical n: numerical

Position:	1	2	3	4	5	6	7	–	8	9	10	11	12	–	13	14	15	16			Order codes		
Order No.:	3	A	H	3	n	n	n	–	n	a	a	n	n	–	n	a	a	n	–	★	■	■	■

	Primary part
1st position	Superior group Switching devices
2nd position	Main group Circuit-breaker
3rd position	Subgroup Circuit-breaker type series
4th to 8th position	Basic equipment Design and ratings primary part
	Secondary part
9th to 16th position	Secondary equipment Operating mechanism, releases, operating voltages and further auxiliary equipment
	Order codes Group of 3 after the Order No. Format: a n a
	Special versions (★) Initiated with "-Z" Group of 3 after the Order No. Format: a n n

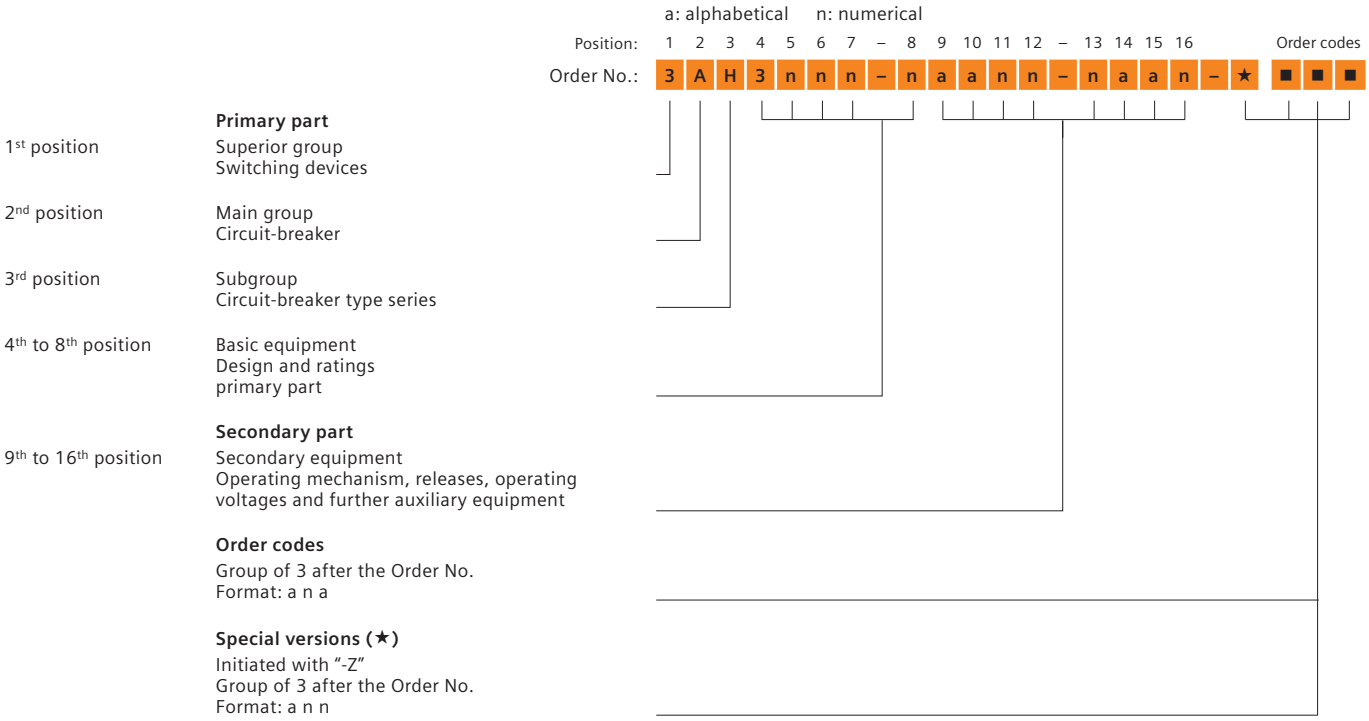

Configuration example

In order to simplify the selection of the correct order number for the requested circuit-breaker type, you will find a configuration example on each page of the chapter "Equipment Selection". For the selection of the secondary part, always the last example of the primary part was taken over and continued, so that at the end of the equipment selection (page 28) a completely configured circuit-breaker results as an example.

On the foldout page we offer a configuring aid. Here you can fill in the order number you have determined for your circuit-breaker.

Example for Order No.:	3	A	H	3	1	1	7	–	7	■	■	■	■	–	■	■	■	■					
Order codes:																							

7.2 kV

50/60 Hz

Rated voltage U_r kV	Rated lightning impulse withstand voltage U_p kV	Rated short-duration power-frequency withstand voltage U_d kV	Rated short-circuit breaking current at 36 % DC component I_{SC} kA	Rated short-circuit making current (at 50/60 Hz) I_{ma} kA	Pole-centre distance mm	Rated normal current I_r A	1	2	3	4	5	6	7	–	8	9 See page 19	10 See page 20	11 See page 21	12 See page 22	–	13 See page 23	14 See page 24	15 See page 25	16 See page 26	–	See page 27	Order codes		
						Order No.:	3	A	H	3	■	■	■	–	■	■	■	■	■	–	■	■	■	■	–	★	■	■	■
7.2	60	20	**50**	125/130	**210**	1250	3	A	H	3	0	5	7	–	2														
						2000	3	A	H	3	0	5	7	–	4														
						2500	3	A	H	3	0	5	7	–	6														
						3150	3	A	H	3	0	5	7	–	7														
					275	4000	3	A	H	3	0	7	7	–	8														
			63	160/164	**275**	1250	3	A	H	3	0	7	8	–	2														
						2500	3	A	H	3	0	7	8	–	6														
						3150	3	A	H	3	0	7	8	–	7														
						4000	3	A	H	3	0	7	8	–	8														
Special versions U_d = 32 kV																									–	Z	E	1	6

12 kV

50/60 Hz

U_r kV	U_p kV	U_d kV	I_{SC} kA	I_{ma} kA	mm	I_r A																							
12	75	28	**50**	125/130	**210**	1250	3	A	H	3	1	1	7	–	2														
						2000	3	A	H	3	1	1	7	–	4														
						2500	3	A	H	3	1	1	7	–	6														
						3150	3	A	H	3	1	1	7	–	7														
					275	4000	3	A	H	3	1	2	7	–	8														
			63	160/164	**275**	1250	3	A	H	3	1	2	8	–	2														
						2500	3	A	H	3	1	2	8	–	6														
						3150	3	A	H	3	1	2	8	–	7														
						4000	3	A	H	3	1	2	8	–	8														
Special versions U_d = 42 kV																									–	Z	E	1	3

Configuration example

3AH3 vacuum circuit-breaker

Rated voltage U_r = **12 kV, 50/60 Hz**

Rated lightning impulse withstand voltage U_p = **75 kV**

Rated short-circuit breaking current I_{SC} = **50 kA**

Pole-centre distance = **210 mm**

Rated normal current I_r = **1250 A**

	1	2	3	4	5	6	7	–	8	9	10	11	12	–	13	14	15	16					
	3	A	H	3																			
					1	1	7	–	2														
Example for Order No.:	3	A	H	3	1	1	7	–	2	■	■	■	■	–	■	■	■	■					
Order codes:																							

Equipment Selection

Selection of basic types, high-current circuit-breakers (circuit-breakers according to IEC 62271-100)

17.5 kV

50/60 Hz

Rated voltage U_r kV	Rated lightning impulse withstand voltage U_p kV	Rated short-duration power-frequency withstand voltage U_d kV	Rated short-circuit breaking current at 36 % DC component I_{SC} kA	Rated short-circuit making current (at 50/60 Hz) I_{ma} kA	Pole-centre distance mm	Rated normal current I_r A	Position: 1	2	3	4	5	6	7	–	8	9	10	11	12	–	13	14	15	16			Order codes		
						Order No.:	3	A	H	3	■	■	■	–	■	■	■	■	■	–	■	■	■	■	–	★	■	■	■
																See page 19	See page 20	See page 21	See page 22		See page 23	See page 24	See page 25	See page 26		See page 27			
17.5	95	38	**50**	125/130	**210**	1250	3	A	H	3	2	1	7	–	2														
						2000	3	A	H	3	2	1	7	–	4														
						2500	3	A	H	3	2	1	7	–	6														
						3150	3	A	H	3	2	1	7	–	7														
					275	4000	3	A	H	3	2	2	7	–	8														
			63	160/164	**275**	1250	3	A	H	3	2	2	8	–	2														
						2500	3	A	H	3	2	2	8	–	6														
						3150	3	A	H	3	2	2	8	–	7														
						4000	3	A	H	3	2	2	8	–	8														
Special versions U_d = 42 kV																									–	Z	E	1	3

24 kV

50/60 Hz

U_r kV	U_p kV	U_d kV	I_{SC} kA	I_{ma} kA	mm	I_r A	1	2	3	4	5	6	7	–	8	9	10	11	12	–	13	14	15	16					
24	125	50	**40**	100/104	**275**	2500	3	A	H	3	2	6	6	–	6														
	125	50	**40**	100/104	**275**	3150	3	A	H	3	2	6	6	–	7														
	110 [1)]	50	**50**	125/130	**275**	3150	3	A	H	3	2	6	7	–	7														
	125	50	**50**	125/130	**300**	4000	3	A	H	3	3	6	7	–	8														

1) Deviation from standard value

Configuration example

3AH3 vacuum circuit-breaker

Rated voltage U_r = **17.5 kV, 50/60 Hz**

Rated lightning impulse withstand voltage U_p = **95 kV**

Rated short-circuit breaking current I_{SC} = **63 kA**

Pole-centre distance = **275 mm**

Rated normal current I_r = **4000 A**

	1	2	3	4	5	6	7	–	8	9	10	11	12	–	13	14	15	16					
	3	A	H	3																			
					2	2	8	–	8														
Example for Order No.:	3	A	H	3	2	2	8	–	8	■	■	■	■	–	■	■	■	■					
Order codes:																							

36 kV

50/60 Hz

Rated voltage U_r kV	Rated lightning impulse withstand voltage U_p kV	Rated short-duration power-frequency withstand voltage U_d kV	Rated short-circuit breaking current at 36 % DC component I_{SC} kA	Rated short-circuit making current (at 50/60 Hz) I_{ma} kA	Pole-centre distance mm	Rated normal current I_r A	Position: 1	2	3	4	5	6	7	–	8	9	10	11	12	–	13	14	15	16			Order codes		
						Order No.:	3	A	H	3	■	■	■	–	■	■	■	■	■	–	■	■	■	■	–	★	■	■	■
																See page 19	See page 20	See page 21			See page 23	See page 24	See page 25	See page 26		See page 27			
36	170	70	**31.5**	80/82	**350**	1250	3	A	H	3	3	0	5	–	2														
						2000	3	A	H	3	3	0	5	–	4														
						2500	3	A	H	3	3	0	5	–	6														
						3150	3	A	H	3	3	0	5	–	7														
						4000	3	A	H	3	3	0	5	–	8														
			40	100/104	**350**	2500	3	A	H	3	3	0	6	–	6														
						3150	3	A	H	3	3	0	6	–	7														
						4000	3	A	H	3	3	0	6	–	8														

Special versions

U_r kV	U_p kV	U_d kV																											
																						–	★	■	■	■	■	■	■
36	**185**	**85**																				–	Z	E	1	4	+	E	1	5
36	**195**	**95**	not for 8th position 7 or 8																			–	Z	E	2	4	+	E	2	5

40.5 kV

50/60 Hz

U_r kV	U_p kV	U_d kV	I_{SC} kA	I_{ma} kA	mm	I_r A																							
																		–	★	■	■	■		■	■	■	■	■	■
40.5	185	85	**31.5**	80/82	**350**	1250	3	A	H	3	3	0	5	–	2			–	Z	Y	0	9	+	E	1	4	+	E	1	5
						2000	3	A	H	3	3	0	5	–	4			–	Z	Y	0	9	+	E	1	4	+	E	1	5
						2500	3	A	H	3	3	0	5	–	6			–	Z	Y	0	9	+	E	1	4	+	E	1	5
						3150	3	A	H	3	3	0	5	–	7			–	Z	Y	0	9	+	E	1	4	+	E	1	5
						4000	3	A	H	3	3	0	5	–	8			–	Z	Y	0	9	+	E	1	4	+	E	1	5
			40	100/104	**350**	2500	3	A	H	3	3	0	6	–	6			–	Z	Y	0	9	+	E	1	4	+	E	1	5
						3150	3	A	H	3	3	0	6	–	7			–	Z	Y	0	9	+	E	1	4	+	E	1	5
						4000	3	A	H	3	3	0	6	–	8			–	Z	Y	0	9	+	E	1	4	+	E	1	5

Special versions

U_r kV	U_p kV	U_d kV																											
																		–	★	■	■	■		■	■	■	■	■	■
40.5	**195**	**95**	not for 8th position 7 or 8															–	Z	Y	0	9	+	E	2	4	+	E	2	5

Configuration example

3AH3 vacuum circuit-breaker

Rated voltage U_r = **36 kV, 50/60 Hz**

Rated lightning impulse withstand voltage U_p = **170 kV**

Rated short-circuit breaking current I_{SC} = **40 kA**

Pole-centre distance = **350 mm**

Rated normal current I_r = **2500 A**

							3	A	H	3																			
											3	0	6	–	6														
						Example for Order No.:	3	A	H	3	3	0	6	–	6	■	■	■	■	–	■	■	■	■					
						Order codes:																							

Equipment Selection

Selection of basic types, generator circuit-breakers according to IEC/IEEE 62271-37-013

17.5 kV Design Classic

50/60 Hz

Rated voltage U_r kV	Rated lightning impulse withstand voltage U_p kV	Rated short-duration power-frequency withstand voltage U_d kV	Rated short-circuit breaking current at 36 % DC component I_{SC} kA	Rated short-circuit making current (at 50/60 Hz) I_{ma} kA	Pole-centre distance mm	Rated normal current I_r A	1	2	3	4	5	6	7	–	8	9 See page 19	10 See page 20	11 See page 21	12 See page 22	–	13 See page 23	14 See page 24	15 See page 25	16 See page 26	–	★ See page 27	Order codes		
						Order No.:	3	A	H	3	■	■	■	–	■	■	■	■	■	–	■	■	■	■	–	★	■	■	■
17.5	110	50	**50**	137	**275**	3150	3	A	H	3	8	1	7	–	7														
						4000	3	A	H	3	8	1	7	–	8														
					300	5000	3	A	H	3	7	1	2	–	4														
						6300	3	A	H	3	7	1	2	–	5														
						8000 [2]	3	A	H	3	7	1	2	–	6														
			63	173	**275**	3150	3	A	H	3	8	1	8	–	7														
						4000	3	A	H	3	8	1	8	–	8														
					300	5000	3	A	H	3	7	1	3	–	4														
						6300	3	A	H	3	7	1	3	–	5														
						8000 [2]	3	A	H	3	7	1	3	–	6														
			72	198	**275**	3150	3	A	H	3	8	1	9	–	7												G	1	A
						4000	3	A	H	3	8	1	9	–	8												G	1	A
					300	5000	3	A	H	3	7	1	4	–	4														
						6300	3	A	H	3	7	1	4	–	5														
						8000 [2]	3	A	H	3	7	1	4	–	6														
As of 5000 A, the 3AH37 must be ordered with supplement for horizontal installation [1]																									–	Z	A	7	0

24 kV Design Classic

50/60 Hz

U_r kV	U_p kV	U_d kV	I_{SC} kA	I_{ma} kA	mm	I_r A	1	2	3	4	5	6	7	–	8
24	125	60	**50**	137	**300**	3150	3	A	H	3	7	2	2	–	2
						4000	3	A	H	3	7	2	2	–	3
						5000	3	A	H	3	7	2	2	–	4
						6300	3	A	H	3	7	2	2	–	5
						8000 [2]	3	A	H	3	7	2	2	–	6
			63	173	**300**	3150	3	A	H	3	7	2	3	–	2
						4000	3	A	H	3	7	2	3	–	3
						5000	3	A	H	3	7	2	3	–	4
						6300	3	A	H	3	7	2	3	–	5
						8000 [2]	3	A	H	3	7	2	3	–	6
			72	198	**300**	3150	3	A	H	3	7	2	4	–	2
						4000	3	A	H	3	7	2	4	–	3
						5000	3	A	H	3	7	2	4	–	4
						6300	3	A	H	3	7	2	4	–	5
						8000 [2]	3	A	H	3	7	2	4	–	6
As of 5000 A, the 3AH37 must be ordered with supplement for horizontal installation [1]															

1) The 3AH38 can always be installed in vertical and horizontal position. The supplement A70 is only required for the 3AH37 as of 5000 A.
2) With forced cooling

Configuration example

3AH3 vacuum circuit-breaker

Rated voltage U_r = **24 kV, 50/60 Hz**

Rated lightning impulse withstand voltage U_p = **125 kV**

Rated short-circuit breaking current I_{SC} = **72 kA**

Pole-centre distance = **300 mm**

Rated normal current I_r = **6300 A**

	1	2	3	4	5	6	7	–	8	9	10	11	12	–	13	14	15	16	–	★			
	3	A	H	3																			
					7	2	4	–	5														
Example for Order No.:	3	A	H	3	7	2	4	–	5	■	■	■	■	–	■	■	■	■					
Order codes:																							

9th position
Release combination [1)]

Position:	1	2	3	4	5	6	7	–	8	9	10	11	12		13	14	15	16			Order codes		
Order No.:	3	A	H	3	■	■	■	–	■	■	■	■	■	–	■	■	■	■	–	★	■	■	■

1st shunt release	2nd shunt release	3rd shunt release	C.t.-operated release 0.5 A [2)]	C.t.-operated release 1 A [2)]	C.t.-operated release with tripping pulse ≥ 0.1Ws (10 Ω)	C.t.-operated release with tripping pulse ≥ 0.1Ws (20 Ω)	Undervoltage release	9	10	11	12	13	14	15	16			Order codes		
									See page 20	See page 21	See page 22	See page 23	See page 24	See page 25	See page 26		See page 27			
I								M												
I	II							N												
I	II	III						N								–	Z	F	1	5
I	II		III					P												
I	II			III				P								–	Z	A	4	6
I	II				III			P								–	Z	A	4	4
I	II					III		P								–	Z	A	4	5
I	II						III	T												
I			II					Q												
I							II	R												
I			II				III	S												
I				II			III	S								–	Z	A	4	6
I					II		III	S								–	Z	A	4	4
I						II	III	S								–	Z	A	4	5
I			II					U												
I				II				U								–	Z	A	4	6
I					II			V												
I						II		V								–	Z	A	4	5

I = Position of first release II = Position of second release III = Position of third release

1) The operating voltage is selected at the 11th to 13th position
2) Combinations of two c.t.-operated releases on request

On request, a faster release is available, which can implement tripping times of approx. 20 ms in combination with a special capacitor device.

Configuration example

3AH3 vacuum circuit-breaker
(U_r = **36 kV**, **50/60 Hz**, U_p = **170 kV**, I_{SC} = **40 kA**, I_r = **2500 A**,
pole-centre distance = **350 mm**)
Closing solenoid, 1st shunt release, undervoltage release and
c.t.-operated release with a rated normal current of **1 A**

	1	2	3	4	5	6	7	–	8	9	10	11	12		13	14	15	16			Order codes		
	3	A	H	3																			
					3	0	6	–	6														
										S									–	Z	A	4	6
Example for Order No.:	3	A	H	3	3	0	6	–	6	S	■	■	■	–	■	■	■	■	–	Z			
Order codes:	A	4	6																				

Equipment Selection

Selection of secondary equipment

10th position

Operating voltage of the closing solenoid

Position:	1	2	3	4	5	6	7	–	8	9	10	11	12	–	13	14	15	16			Order codes		
Order No.:	3	A	H	3	■	■	■	–	■	■	■	■	■	–	■	■	■	■	–	★	■	■	■
												See page 21	See page 22		See page 23	See page 24	See page 25	See page 26		See page 27			
Standard voltages																							
Mechanical closing at the circuit-breaker																							
24 V DC											B												
48 V DC											C												
60 V DC											D												
110 V DC											E												
220 V DC											F												
100 V AC 50/60 Hz 1)											H												
110 V AC 50/60 Hz 1)											J												
230 V AC 50/60 Hz 1)											K												
Special voltages																							
30 V DC											Z										K	1	A
32 V DC											Z										K	1	B
120 V DC											Z										K	1	C
125 V DC											Z										K	1	D
127 V DC											Z										K	1	E
240 V DC											Z										K	1	F
120 V AC 50/60 Hz 1)											Z										K	1	K
125 V AC 50/60 Hz 1)											Z										K	1	L
240 V AC 50/60 Hz 1)											Z										K	1	M
Manual electrical closing at the circuit-breaker																							
24 V DC											M												
48 V DC											N												
60 V DC											P												
110 V DC											Q												
220 V DC											R												
100 V AC 50/60 Hz 1)											T												
110 V AC 50/60 Hz 1)											U												
230 V AC 50/60 Hz 1)											V												
Special voltages																							
30 V DC											Z										K	2	A
32 V DC											Z										K	2	B
120 V DC											Z										K	2	C
125 V DC											Z										K	2	D
127 V DC											Z										K	2	E
240 V DC											Z										K	2	F
120 V AC 50/60 Hz 1)											Z										K	2	K
125 V AC 50/60 Hz 1)											Z										K	2	L
240 V AC 50/60 Hz 1)											Z										K	2	M

1) The AC frequency 50 or 60 Hz is selected at the 16th position of the order number together with the language (see page 26)

Configuration example

3AH3 vacuum circuit-breaker
(U_r = **36 kV**, **50/60 Hz**, U_p = **170 kV**, I_{SC} = **40 kA**, I_r = **2500 A**,
pole-centre distance = **350 mm**)
Manual electrical closing at the circuit-breaker,
operating voltage of the closing solenoid **32 V DC**

	3	A	H	3																			
					3	0	6	–	6	S													
											Z										K	2	B
Example for Order No.:	3	A	H	3	3	0	6	–	6	S	Z	■	■	–	■	■	■	■	–	Z			
Order codes:	A	4	6	+	K	2	B																

11th position
Operating voltage of the 1st shunt release

Position:	1	2	3	4	5	6	7	–	8	9	10	11	12	–	13	14	15	16			Order codes		
Order No.:	3	A	H	3	■	■	■	–	■	■	■	■	■	–	■	■	■	■	–	★	■	■	■
													See page 22		See page 23	See page 24	See page 25	See page 26		See page 27			

Standard voltages		Special voltages		11th position	Order codes
24 V DC				1	
48 V DC				2	
60 V DC				3	
110 V DC				4	
220 V DC				5	
100 V AC	50/60 Hz 1)			6	
110 V AC	50/60 Hz 1)			7	
230 V AC	50/60 Hz 1)			8	
		30 V DC		9	L 1 A
		32 V DC		9	L 1 B
		120 V DC		9	L 1 C
		125 V DC		9	L 1 D
		127 V DC		9	L 1 E
		240 V DC		9	L 1 F
		120 V AC	50/60 Hz 1)	9	L 1 K
		125 V AC	50/60 Hz 1)	9	L 1 L
		240 V AC	50/60 Hz 1)	9	L 1 M

1) The AC frequency 50 or 60 Hz is selected at the 16th position of the order number together with the language (see page 26)

Configuration example

3AH3 vacuum circuit-breaker
(U_r = **36 kV**, **50/60 Hz**, U_p = **170 kV**, I_{SC} = **40 kA**, I_r = **2500 A**,
pole-centre distance = **350 mm**)
Operating voltage of the 1st shunt release **48 V DC**

	3	A	H	3																			
					3	0	6	–	6	S	Z												
												2											
Example for Order No.:	3	A	H	3	3	0	6	–	6	S	Z	2	■	–	■	■	■	■	–	Z			
Order codes:	A	4	6	+	K	2	B																

Equipment Selection

Selection of secondary equipment

12th position

Operating voltage of the 2nd release

Shunt release, undervoltage release or c.t.-operated release

Position:	1	2	3	4	5	6	7	–	8	9	10	11	12	–	13	14	15	16			Order codes		
Order No.:	3	A	H	3	■	■	■	–	■	■	■	■	■	–	■	■	■	■	–	★	■	■	■
															See page 23	See page 24	See page 25	See page 26		See page 27			
Standard voltages																							
Without or c.t.-operated release													0										
24 V DC													1										
48 V DC													2										
60 V DC													3										
110 V DC													4										
220 V DC													5										
100 V AC 50/60 Hz 1)													6										
110 V AC 50/60 Hz 1)													7										
230 V AC 50/60 Hz 1)													8										
Special voltages																							
30 V DC													9								M	1	A
32 V DC													9								M	1	B
120 V DC													9								M	1	C
125 V DC													9								M	1	D
127 V DC													9								M	1	E
240 V DC													9								M	1	F
120 V AC 50/60 Hz 1)													9								M	1	K
125 V AC 50/60 Hz 1)													9								M	1	L
240 V AC 50/60 Hz 1)													9								M	1	M
Special versions																							
To operate the 2nd release as an undervoltage release on an energy store type AN 1902- (for DC) or AN 1901-2 (for AC), both make Bender, the operating voltage must be defined – and whether the energy store will be provided by the customer or included in the scope of supply.																							
Energy store																							
Type / In the scope of supply																							
60 V DC AN 1902- no													9								M	2	D
110 V DC AN 1902- no													9								M	2	E
220 V DC AN 1902- no													9								M	2	F
100 V/110 V/230 V AC AN 1901-2 no													9								M	2	G
60 V DC AN 1902- yes													9								M	3	D
110 V DC AN 1902- yes													9								M	3	E
220 V DC AN 1902- yes													9								M	3	F
100 V/110 V/230 V AC AN 1901-2 yes													9								M	3	G

1) The AC frequency 50 or 60 Hz is selected at the 16th position of the order number together with the language (see page 26)

Configuration example

3AH3 vacuum circuit-breaker

(U_r = **36 kV**, **50/60 Hz**, U_p = **170 kV**, I_{SC} = **40 kA**, I_r = **2500 A**,

pole-centre distance = **350 mm**)

2nd release as undervoltage release with operating voltage **32 V DC**

	3	A	H	3																			
					3	0	6	–	6	S	Z	2											
													9								M	1	B
Example for Order No.:	3	A	H	3	3	0	6	–	6	S	Z	2	9	–	■	■	■	■	–	Z			
Order codes:	A	4	6	+	K	2	B	+	M	1	B												

13th position

Operating voltage of the 3rd release

Shunt release, undervoltage release or c.t.-operated release

Position:	1	2	3	4	5	6	7	–	8	9	10	11	12	–	13	14	15	16			Order codes		
Order No.:	3	A	H	3	■	■	■	–	■	■	■	■	■	–	■	■	■	■	–	★	■	■	■
																See page 24	See page 25	See page 26		See page 27			

Standard voltages		Special voltages		13	Order codes
Without or c.t.-operated release				0	
24 V DC				1	
48 V DC				2	
60 V DC				3	
110 V DC				4	
220 V DC				5	
100 V AC	50/60 Hz [1]			6	
110 V AC	50/60 Hz [1]			7	
230 V AC	50/60 Hz [1]			8	
		30 V DC		9	N 1 A
		32 V DC		9	N 1 B
		120 V DC		9	N 1 C
		125 V DC		9	N 1 D
		127 V DC		9	N 1 E
		240 V DC		9	N 1 F
		120 V AC	50/60 Hz [1]	9	N 1 K
		125 V AC	50/60 Hz [1]	9	N 1 L
		240 V AC	50/60 Hz [1]	9	N 1 M
Special versions					
To operate the 3rd release as an undervoltage release on an energy store type AN 1902- (for DC) or AN 1901-2 (for AC), both make Bender, the operating voltage must be defined – and whether the energy store will be provided by the customer or included in the scope of supply.					
		Energy store			
		Type	In the scope of supply		
60 V DC		AN 1902-	no	9	N 2 D
110 V DC		AN 1902-	no	9	N 2 E
220 V DC		AN 1902-	no	9	N 2 F
100 V/110 V/230 V AC		AN 1901-2	no	9	N 2 G
60 V DC		AN 1902-	yes	9	N 3 D
110 V DC		AN 1902-	yes	9	N 3 E
220 V DC		AN 1902-	yes	9	N 3 F
100 V/110 V/230 V AC		AN 1901-2	yes	9	N 3 G

1) The AC frequency 50 or 60 Hz is selected at the 16th position of the order number together with the language (see page 26)

Configuration example

3AH3 vacuum circuit-breaker
(U_r = **36 kV**, **50/60 Hz**, U_p = **170 kV**, I_{SC} = **40 kA**, I_r = **2500 A**,
pole-centre distance = **350 mm**)
3rd release as c.t.-operated release

	3	A	H	3																			
					3	0	6	–	6	S	Z	2	9	–									
															0								
Example for Order No.:	3	A	H	3	3	0	6	–	6	S	Z	2	9	–	0	■	■	■	–	Z			
Order codes:	A	4	6	+	K	2	B	+	M	1	B												

Equipment Selection

Selection of secondary equipment

14th position

Operating voltage of the operating mechanism

Position:	1	2	3	4	5	6	7	–	8	9	10	11	12	–	13	14	15	16			Order codes		
Order No.:	3	A	H	3	■	■	■	–	■	■	■	■	■	–	■	■	■	■	–	★	■	■	■
Standard voltages / Special voltages																	See page 25	See page 26		See page 27			
Manual operating mechanism (hand crank included in the scope of supply)																A							
24 V DC																B							
48 V DC																C							
60 V DC																D							
110 V DC																E							
220 V DC																F							
100 V AC 50/60 Hz 1)																H							
110 V AC 50/60 Hz 1)																J							
230 V AC 50/60 Hz 1)																K							
30 V DC																Z					P	1	A
32 V DC																Z					P	1	B
120 V DC																Z					P	1	C
125 V DC																Z					P	1	D
127 V DC																Z					P	1	E
240 V DC																Z					P	1	F
120 V AC 50/60 Hz 1)																Z					P	1	K
125 V AC 50/60 Hz 1)																Z					P	1	L
240 V AC 50/60 Hz 1)																Z					P	1	M

1) The AC frequency 50 or 60 Hz is selected at the 16th position of the order number together with the language (see page 26)

Configuration example

3AH3 vacuum circuit-breaker

(U_r = **36 kV**, **50/60 Hz**, U_p = **170 kV**, I_{SC} = **40 kA**, I_r = **2500 A**,

pole-centre distance = **350 mm**)

Operating voltage of the operating mechanism **230 V AC, 50 Hz**

	3	A	H	3																			
					3	0	6	–	6	S	Z	2	9	–	0								
																K							
Example for Order No.:	3	A	H	3	3	0	6	–	6	S	Z	2	9	–	0	K	■	■	–	Z			
Order codes:	A	4	6	+	K	2	B	+	M	1	B												

15th position
Auxiliary switch, low-voltage interface, interlocking

Mechanical interlocking	Auxiliary switch 6NO+6NC	Auxiliary switch 12NO+ 12NC	64-pole plug [1]	24-pole plug [2]	24-pole terminal strip [2]	Position: 1 2 3 4 5 6 7 – 8 9 10 11 12 – 13 14	15	16	See page 26	See page 27	Order codes
						Order No.: 3 A H 3 ■ ■ ■ – ■ ■ ■ ■ ■ – ■ ■	■	■	–	★	■ ■ ■
	■		■				A				
	■			■			E				
	■				■		G				
		■	■				C				
		■			■		M				
■	■		■				B				
■	■			■			F				
■	■				■		H				
■		■	■				D				
■		■			■		N				
Special version											
Auxiliary switch **12 NO + 12 NC** and 24-pole plug (**E** or **F**) [2]									–	Z	A 2 6
Special versions gold-plated contacts and pins											
Auxiliary switch **6 NO + 6 NC** and 24-pole terminal strip (**G** or **H**)									–	Z	A 1 7
Auxiliary switch **12 NO + 12 NC** and 24-pole terminal strip (**M** or **N**)									–	Z	A 1 8
Auxiliary switch **6 NO + 6 NC** and 64-pole plug (**A** or **B**)									–	Z	A 2 0
Auxiliary switch **12 NO + 12 NC** and 64-pole plug (**C** or **D**)									–	Z	A 2 1

1) Depending on the equipment, some connections of the 64-pole plug connector remain free. These can be connected to free auxiliary switch contacts by the customer. Prefabricated wires are available as accessories.
2) Auxiliary switch contacts are not wired to the plug/terminal strip and must therefore be connected directly.

Configuration example

3AH3 vacuum circuit-breaker	3	A	H	3																			
(U_r = **36 kV**, **50/60 Hz**, U_p = **170 kV**, I_{SC} = **40 kA**, I_r = **2500 A**,																							
pole-centre distance = **350 mm**)					3	0	6	–	6	S	Z	2	9	–	0	K							
Auxiliary switch 6 NO + 6 NC, 64-pole plug and with mechanical interlocking																	B						
Auxiliary switch contacts and pins of the plug connector gold-plated																			–	Z	A	2	0
Example for Order No.:	3	A	H	3	3	0	6	–	6	S	Z	2	9	–	0	K	B	■	–	Z			
Order codes:	A	4	6	+	K	2	B	+	M	1	B	+	A	2	0								

Equipment Selection

Selection of secondary equipment

16th position

Languages of operating instructions and rating plate, as well as AC frequency of operating voltage 1)

Position:	1	2	3	4	5	6	7	–	8	9	10	11	12	–	13	14	15	16			Order codes		
Order No.:	3	A	H	3	■	■	■	–	■	■	■	■	■	–	■	■	■	■	–	★	■	■	■

Language selection				Frequency selection																					
German	English	French	Spanish	All secondary voltages	– DC or	– 50 Hz or	– 50 Hz and DC	All secondary voltages	– 60 Hz or	– 60 Hz and DC															
■						■															0				
■									■												1				
	■					■															2				
	■								■												3				
		■				■															4				
		■							■												5				
			■			■															6				
			■						■												7				
Other languages on request																									
Special versions																									
Portuguese (operating voltage 50 Hz or DC)																					9			R	1	C
Portuguese (operating voltage 60 Hz or DC)																					9			R	1	D
Italian (operating voltage 50 Hz or DC)																					9			R	1	F
Russian (operating voltage 50 Hz or DC)																					9			R	1	G
Russian (operating voltage 60 Hz or DC)																					9			R	1	H
Polish (operating voltage 50 Hz or DC)																					9			R	1	K
Additional specifications on the rating plate (only after consultation with the order processing department at the Switchgear Factory Berlin). Specifications additionally in clear text.																						–	Z	Y	1	2
Operating instructions and product designation for USA																						–	Z	Y	4	0

1) AC voltage refers to the secondary part and not to the primary part of the circuit-breaker

See page 27

Configuration example

3AH3 vacuum circuit-breaker	3	A	H	3																			
(U_r = **36 kV, 50/60 Hz**, U_p = **170 kV**, I_{SC} = **40 kA**, I_r = **2500 A**, pole-centre distance = **350 mm**)					3	0	6	–	6	S	Z	2	9	–	0	K							
Auxiliary switch 6 NO + 6 NC, 64-pole plug and with mechanical interlocking																	B						
Auxiliary switch contacts and pins of the plug connector gold-plated																			–	Z	A	2	0
Frequency 50 Hz or DC, operating instructions and rating plate in English																		2					
Example for Order No.:	3	A	H	3	3	0	6	–	6	S	Z	2	9	–	0	K	B	2	–	Z			
Order codes:	A	4	6	+	K	2	B	+	M	1	B	+	A	2	0								

Additional equipment

Position:	1	2	3	4	5	6	7	–	8	9	10	11	12		13	14	15	16			Order codes		
Order No.:	3	A	H	3	■	■	■	–	■	■	■	■	■	–	■	■	■	■	–	★	■	■	■
Options																							
Wire ends with marking at the plug																			–	Z	A	0	5
Wiring cable AWG14 SIS Gray (UL-listed)																			–	Z	A	0	6
Wiring cables, halogen-free and flame-retardant																			–	Z	A	1	0
Destination end marking at wire ends + wire end ferrules pulled out without plug (must be ordered with B01 to B08)																			–	Z	A	1	1
Wiring cables, tinned (and halogen-free and flame-retardant)																			–	Z	A	1	2
Gold-plated aux. switch 6 NO + 6 NC and 24-pole terminal strip (G or H)																			–	Z	A	1	7
Gold-plated aux. switch 12 NO + 12 NC and 24-pole terminal strip (M or N)																			–	Z	A	1	8
Gold-plated aux. switch 6 NO + 6 NC and 64-pole plug (A or B)																			–	Z	A	2	0
Gold-plated aux. switch 12 NO + 12 NC and 64-pole plug (C or D)																			–	Z	A	2	1
Auxiliary switch 12 NO + 12 NC and 24-pole plug (E or F)																			–	Z	A	2	6
Protection against condensed water, heating for 110 V AC, 50 W																			–	Z	A	2	9
Protection against condensed water, heating for 230 V AC, 50 W																			–	Z	A	3	0
Silicone-free design																			–	Z	A	3	1
Circuit-breaker for operation up to an ambient air temperature of -25 °C	On request																		–	Z	A	4	0
Tripping pulse equal to or greater than 0.1 Ws (10 Ω)																			–	Z	A	4	4
Tripping pulse equal to or greater than 0.1 Ws (20 Ω)																			–	Z	A	4	5
C.t.-operated release 1.0 A																			–	Z	A	4	6
Electrical closing lockout without measuring element																			–	Z	A	4	7
Spring-dump (release of energy store when the plug is disconnected)																			–	Z	A	6	1
Prevalent trip (opening operation prevents closing)																			–	Z	A	6	2
Prevalent trip, spring-dump, and "closed breaker" interrogation *																			–	Z	A	6	4
Prevalent trip and spring-dump *																			–	Z	A	6	5
3AH37 vacuum circuit-breaker as of 5000 A for horizontal installation																			–	Z	A	7	0
Additional rating plate, loose delivery																			–	Z	B	0	0
Cable harness 800 mm, pulled out																			–	Z	B	0	1
Cable harness 500 mm, pulled out																			–	Z	B	0	2
Cable harness 2000 mm, pulled out																			–	Z	B	0	3
Cable harness 1200 mm, pulled out																			–	Z	B	0	4
Cable harness 1500 mm, pulled out																			–	Z	B	0	5
Cable harness 2500 mm, pulled out																			–	Z	B	0	6
Cable harness 3000 mm, pulled out																			–	Z	B	0	7
Cable harness 3500 mm, pulled out																			–	Z	B	0	8
Without cover																			–	Z	B	2	0
Without upper part of plug																			–	Z	B	2	3
30-pole terminal strip																			–	Z	B	4	2
Close-open solenoids with thermo switch (only valid for 60 V /110 V /220 V DC)																			–	Z	B	4	7
2 x 24-pole terminal strip																			–	Z	B	6	0
2 x 24-pole plug																			–	Z	B	6	5
Special circuit diagram																			–	Z	B	9	9
Silver-plated primary circuits for external connections and internal interconnection on both sides (standard for 4000 A circuit-breakers and IEC/IEEE 62271-37-013)																			–	Z	D	1	0
For use in environments containing H2S: Gold-plated contacts, tinned pole side	On request																		–	Z	D	2	0
Rated short-duration power-frequency withstand voltage 42 kV (for 12 kV)																			–	Z	E	1	3
Rated lightning impulse withstand voltage 185 kV (as of 36 kV)																			–	Z	E	1	4
Rated short-duration power-frequency withstand voltage 85 kV (as of 36 kV)																			–	Z	E	1	5
Rated short-duration power-frequency withstand voltage 32 kV (for 7.2 kV)																			–	Z	E	1	6
Rated lightning impulse withstand voltage 195 kV (as of 36 kV)																			–	Z	E	2	4
Rated short-duration power-frequency withstand voltage 95 kV (as of 36 kV)																			–	Z	E	2	5
Seaworthy transport for Germany																			–	Z	F	0	2
With 3rd shunt release (voltage according to 13th position)																			–	Z	F	1	5
Routine test certificate enclosed with stamp and passport																			–	Z	F	1	9
Routine test certificate enclosed																			–	Z	F	2	0
Routine test certificate with stamp and signature																			–	Z	F	2	1
Routine test certificate (to orderer)																			–	Z	F	2	3

*) Functionalities of the mechanical interface for a solution with withdrawable part
"Closed breaker" interrogation: Through the mechanical interface, the circuit-breaker position can be inquired and racking of the closed circuit-breaker can be blocked.
Prevalent trip: When the mechanical interlocking device is operated, the circuit-breaker is opened and reclosing is prevented.
Spring-dump: The circuit-breaker's closing and opening springs can be discharged by operating the mechanical interface.

Continued on next page

2

Additional equipment (continued)	Position:	1	2	3	4	5	6	7	–	8	9	10	11	12		13	14	15	16			Order codes		
	Order No.:	3	A	H	3	■	■	■	–	■	■	■	■	■	–	■	■	■	■	–	★	■	■	■
Options																								
Rated operating sequence O – 3 min – CO – 3 min – CO (only for IEC)																				–	Z	F	2	7
Rated operating sequence O – 0.3 s – CO – 15 s – CO (only possible up to 31.5 kA)																				–	Z	F	2	8
Hand crank (also for motor operation) for manual charging of the closing spring																				–	Z	F	3	0
Mounted cover for CLOSING (lockable)																				–	Z	J	6	2
Warranty 24 months																				–	Z	W	7	0
Warranty 36 months																				–	Z	W	7	1
Warranty 60 months																				–	Z	W	7	2
Higher rated voltage 40.5 kV (instead of 36 kV) only in combination with E14/E15 as well as E24/E25																				–	Z	Y	0	9
Additional specifications on the rating plate (only after consultation with the order processing department at the Switchgear Factory Berlin). Specifications in clear text.																				–	Z	Y	1	2
Operating instructions and product designation for USA																				–	Z	Y	4	0
Adhesive label yellow/green – ON/OFF																				–	Z	Y	4	5
Other not listed special design (only after consultation with the order processing department at the Switchgear Factory Berlin). Specifications additionally in clear text.																				–	Z	Y	9	9

Configuration example

3AH3 vacuum circuit-breaker	3	A	H	3																			
Rated voltage U_r = **36 kV (50/60 Hz)**																							
Rated lightning impulse withstand voltage U_p = **170 kV**																							
Rated short-circuit breaking current I_{SC} = **40 kA**																							
Pole-centre distance = **350 mm**																							
Rated normal current I_r = **2500 A**					3	0	6	–	6														
Closing solenoid, 1st shunt release, undervoltage release and c.t.-operated release with a rated normal current of **1 A**											S									–	Z	A	4	6
Manual electrical closing at the circuit-breaker, operating voltage of the closing solenoid **32 V DC**												Z										K	2	B
Operating voltage of the 1st shunt release **48 V DC**													2											
2nd release as undervoltage release with operating voltage **32 V DC**														9	–							M	1	B
3rd release as c.t.-operated release																0								
Operating voltage of the operating mechanism **230 V AC, 50 Hz**																	K							
Auxiliary switch 6 NO + 6 NC, 64-pole plug and with mechanical interlocking																		B						
Auxiliary switch contacts and pins of the plug connector gold-plated																				–	Z	A	2	0
Frequency 50 Hz or DC, operating instructions and rating plate in English																			2					
Routine test certificate enclosed																				–	Z	F	2	0
Example for Order No.:	3	A	H	3	3	0	6	–	6	S	Z	2	9	–	0	K	B	2	–	Z				
Order codes:	A	4	6	+	K	2	B	+	M	1	B	+	A	2	0	+	F	2	0					

Remark for orders of accessories and spare parts

The order numbers in the spare part overviews are applicable to vacuum circuit-breakers of current manufacture. When mounting parts or spare parts are being ordered for an existing vacuum circuit-breaker, always quote the type designation, serial number and the year of manufacture of the circuit-breaker to be sure to get the correct delivery.

This data is given on the rating plate.

Retrofitting

When releases/solenoids are retrofitted, the order numbers of the mounting parts must also be specified. For other additional equipment, the required mounting parts are included in the delivery.

Spare interrupters

As spare parts, the vacuum interrupters are supplied with adapter.

Vacuum interrupters and other spare parts must only be replaced by instructed personnel.

Accessories for the plug connector

Included in the scope of supply of the basic equipment for 3AH3 vacuum circuit-breakers:

For 24-pole plug connector
– Lower part of plug
– Crimp sockets according to number of contacts
– Upper part of plug with screwed contacts
(no crimp sockets required)

For 64-pole plug connector
– Lower part of plug
– Upper part of plug
– Crimp sockets according to number of contacts

Data on the rating plate

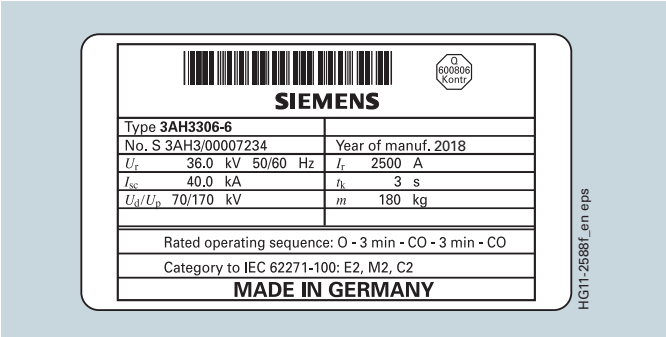

Note:
For any query regarding spare parts, subsequent deliveries, etc. the following three details are necessary:
– Type designation
– Serial No.
– Year of manufacture

2

Accessories and spare parts

Designation	Remarks	Operating voltage	Order No.
Hand crank	Short design		**3AX15 30-4A**
for charging	Standard design		**3AX15 30-4B**
the closing spring	Long design		**3AX15 30-4C**
	Bit for battery screwdriver		**3AX15 30-3D**
Lubricant	(for special application conditions)		
	180 g Klüber-Isoflex Topas L32N		**3AX11 33-3H**
	1 kg Klüber-Isoflex Topas L32N		**3AX11 33-3E**
	1 kg Shell Tellus oil 32 (special oil)		**3AX11 33-2D**
Wire bundle	With 10 wires for connection of auxiliary switch to		
	– 64-pole plug connector		**3AX11 34-2D**
	– 24-pole plug connector		**3AX11 34-2B**
	– 24-pole terminal strip		**3AX11 34-2C**
Plug connector and accessories	(for wire cross-section 1.5 mm²)		
	Crimp pins for lower part of plug	24-pole	**3AX11 34-3A**
		64-pole	**3AX11 34-4B**
	Crimp sockets for upper part of plug	64-pole	**3AX11 34-4C**
	Crimping pliers		**3AX11 34-4D**
	Disassembly tool		**3AX11 34-4G**
	Complete plug connector	24-pole	**3AX11 34-7A**
		64-pole	**3AX11 34-6A**
	Plug connector (lower part)	24-pole	**3AX11 34-5D**
	Plug connector (upper part)	24-pole	**3AX11 34-5C**
	Plug connector (lower part)	64-pole	**3AX11 34-5B**
	Plug connector (upper part)	64-pole	**3AX11 34-5A**
Operating solenoid	Used as closing solenoid or	24 V DC	**3AY15 10-5K**
	1st shunt release	30/32 V DC	**3AY15 10-5M**
		48 V DC	**3AY15 10-5C**
		60 V DC	**3AY15 10-5D**
		110/120 V DC	**3AY15 10-5E**
		125/127 V DC	**3AY15 10-5L**
		220/240 V DC	**3AY15 10-5F**
	Including varistor and rectifier	100 – 125 V AC, 50/60 Hz	**3AY15 10-5E**
		230/240 V AC, 50/60 Hz	**3AY15 10-5F**
2nd shunt release		24 – 32 V DC	**3AX11 01-2B**
		48 – 60 V DC	**3AX11 01-2C**
		110 – 127 V DC	**3AX11 01-2E**
		220 – 240 V DC	**3AX11 01-2F**
		100 – 125 V AC, 50 Hz	**3AX11 01-2G**
		230 – 240 V AC, 50 Hz	**3AX11 01-2J**
		100 – 125 V AC, 60 Hz	**3AX11 01-3G**
		230 – 240 V AC, 60 Hz	**3AX11 01-3J**
Undervoltage release *)		24 V DC	**3AX11 03-2B**
		30/32 V DC	**3AX11 03-2L**
		48 V DC	**3AX11 03-2C**
		60 V DC	**3AX11 03-2D**
		110 V DC	**3AX11 03-2E**
		120 V – 127 V DC	**3AX11 03-2N**
		220 V DC	**3AX11 03-2F**
		240 V DC	**3AX11 03-2P**
		100 V AC, 50 Hz	**3AX11 03-2G**
		110 V – 125 V AC, 50 Hz	**3AX11 03-2H**
		230 V AC, 50 Hz	**3AX11 03-2J**
		240 V AC, 50 Hz	**3AX11 03-2M**
		100 V AC, 60 Hz	**3AX11 03-3G**
		110 V – 125 V AC, 60 Hz	**3AX11 03-3H**
		230 V AC, 60 Hz	**3AX11 03-3J**
		240 V AC, 60 Hz	**3AX11 03-3M**

*) With the readjustment to the auxiliary contactors 3RH1122, the resistor of the undervoltage release is mounted separately -> mounting kit 3AX1711-0W required

Continued on next page

Accessories and spare parts (continued)

Designation	Remarks	Operating voltage	Order No.
Mounting parts	For 2nd shunt release or undervoltage release		
	For 1 existing shunt release (up to serial number 3AH3/00016907)		3AX17 11-3A
	For 2 existing releases (up to serial number 3AH3/00016907)		3AX17 11-3B
	For 1 existing shunt release (as of serial number 3AH3/00016908)		3AX17 11-4A
	For 2 existing releases (as of serial number 3AH3/00016908)		3AX17 11-4B
	Mounting kit for resistor of undervoltage release		3AX17 11-0W
Drive motor		24/30/32 V DC	3AY15 11-3B
		48 V DC	3AY15 11-3C
		60 V DC	3AY15 11-3D
		** 100/110/125/127 V DC/AC	3AY15 11-3E
		** 220 – 250 V DC/AC	3AY15 11-3F
Rectifier element	** For drive motor with AC operation	100 V – 250 V AC	3AX15 25-1F
Auxiliary contactor for anti-pumping	Type 3TH20 22-7 for all circuit-breakers up to serial number 3AH3/00015203, 3AH37/00000241 or 3AH38/00000633	24/30/32 V DC	SWB: 48683
	or with supplement S98	48 V DC	SWB: 48687
		60 V DC	SWB: 48684
		100/120 V DC	SWB: 48685
		125 V – 127 V DC	SWB: 47730
		220 V – 240 V DC	SWB: 48686
		100 – 125 V AC, 50 Hz	SWB: 48680
		230 – 240 V AC, 50 Hz	SWB: 55550
		100 – 125 V AC, 60 Hz	SWB: 48679
		230 – 240 V AC, 60 Hz	SWB: 55550
	Type 3RH1122-2 as of serial number:	24 V DC	SWB: 55656
	3AH3/00015204,	30/32 V DC	SWB: 55658
	3AH37/00000242 or	48 V DC	SWB: 55659
	3AH38/00000634	60 V DC	SWB: 55660
		110 V DC	SWB: 55661
		120/127 V DC	SWB: 55662
		220 V DC	SWB: 55663
		240/250 V DC	SWB: 55665
		110 V AC, 50/60 Hz	SWB: 55666
		120 V AC, 50/60 Hz	SWB: 55667
		125 V AC, 50/60 Hz	SWB: 55668
		230 V AC, 50/60 Hz	SWB: 55669
		240 V AC, 50/60 Hz	SWB: 55670
Position switch	Type 3SE4 (as spare part), without installation accessories		3AX42 06-0A
	Used for:	Number	
	– Electrical anti-pumping (-S3)	1	
	– Motor control (-S21, -S22)	2	
	– Closing spring charged (-S4)	1	
	– Circuit-breaker tripping signal (-S6, -S7)	2	
	– Electrical closing lockout (-S5)	1	
Auxiliary switch (-S1)	6 NO + 6 NC		3SV92 73-2AA0
	12 NO + 12 NC		3SV92 74-2AA0
Mechanical interlocking			3AX15 20-4C
Retaining elements and cotters	For circuit-breaker revisions	Set for one circuit-breaker	3AY15 50-1A
Spare vacuum interrupters	**3AH3 high-current circuit-breaker (IEC)**		
	3AH3057-2/6		3AY17 15-3H
	3AH3057-7		3AY17 15-2J
	3AH3077-8		3AY17 15-4J
	3AH3078-2/6/7		3AY17 15-2J
	3AH3078-8		3AY17 15-4J
	3AH3117-2/6		3AY17 15-3H

** For AC operation a DC motor with an upstream rectifier element must be used

Continued on next page

2

Accessories and spare parts (continued)

Designation	Remarks	Operating voltage	Order No.
Spare vacuum interrupters	3AH3117-7		**3AY17 15-2J**
	3AH3127-8		**3AY17 15-4J**
	3AH3128-2/6/7		**3AY17 15-2J**
	3AH3128-8		**3AY17 15-4J**
	3AH3217-2/6		**3AY17 15-3H**
	3AH3217-7		**3AY17 15-2J**
	3AH3228-2/6/7		**3AY17 15-2J**
	3AH3227-8		**3AY17 15-4J**
	3AH3228-8		**3AY17 15-4J**
	3AH3266-6		**3AY17 15-2M**
	3AH3266-7		**3AY17 15-6M**
	3AH3267-7		**3AY17 15-2J**
	3AH3305-2/4/6		**3AY17 15-1L**
	3AH3305-2/4/6 Z D10		**3AY17 15-2L**
	3AH3305-2/4/6 Z H35		**3AY17 15-1M**
	3AH3305-7		**3AY17 15-5M** [1]
	3AH3305-8		**3AY17 15-5M** [1]
	3AH3306-6		**3AY17 15-1M**
	3AH3306-7		**3AY17 15-5M** [1]
	3AH3306-8		**3AY17 15-5M** [1]
	3AH3367-8		**3AY17 15-4J**
	3AH37/38 high-current and generator circuit-breaker (IEEE)		
	3AH3712-4/5/6, 3AH3713-4/5/6, 3AH3714-4/5/6		[1]
	3AH3722-2/3		**3AY17 15-3J**
	3AH3722-4/5/6		[1]
	3AH3723-2/3		**3AY17 15-2P**
	3AH3723-4/5/6		[1]
	3AH3724-2/3		**3AY17 15-2P**
	3AH3724-4/5/6		[1]
	3AH3817-7		**3AY17 15-1E**
	3AH3817-8		**3AY17 15-2E**
	3AH3818-7 (valid as of ser. no. 3AH3/00004897)		**3AY17 15-1P**
	3AH3818-7 (valid up to ser. no. 3AH38/00004322)		**3AY17 15-1N**
	3AH3818-8 (valid as of ser. no. 3AH3/00004326)		**3AY17 15-2P**
	3AH3818-8 (valid up to ser. no. 3AH38/00004317)		**3AY17 15-4E**
	3AH3819-7		**3AY17 15-1P**
	3AH3819-8		**3AY17 15-2P**
	3AH3837-7		**3AY17 15-1E**
	3AH3837-8		**3AY17 15-2E**
	3AH3838-7 (as of ser. no. 3AH38/00000507)		**3AY17 15-1P**
	3AH3838-7 (centre pole up to ser. no. 3AH38/00000003)		**3AY17 15-1N**
	3AH3838-7 (outer pole up to ser. no. 3AH38/00000003)		**3AY17 15-1E**
	3AH3838-8		**3AY17 15-2P**
	3AH3839-7		**3AY17 15-1P**
	3AH3839-8		**3AY17 15-2P**

1) Interrupters must be exchanged at the Siemens factory

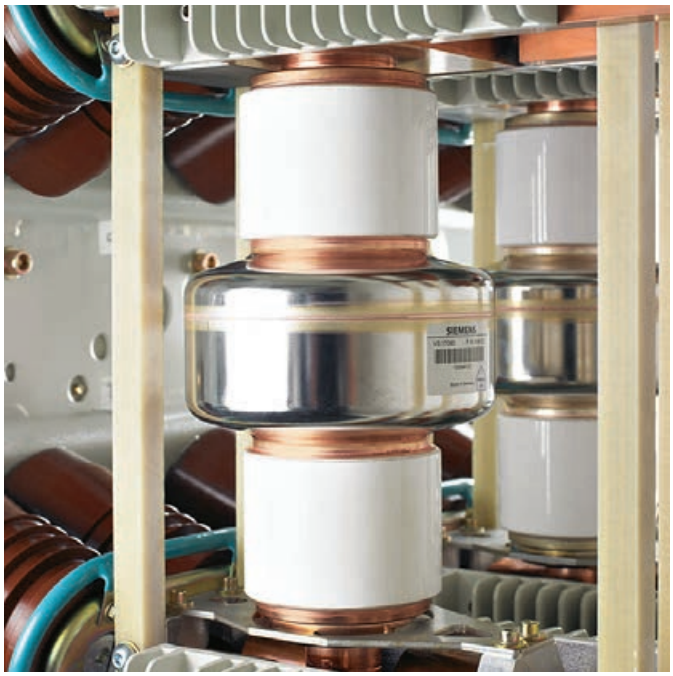

R-HG11-196.tif

Vacuum interrupter

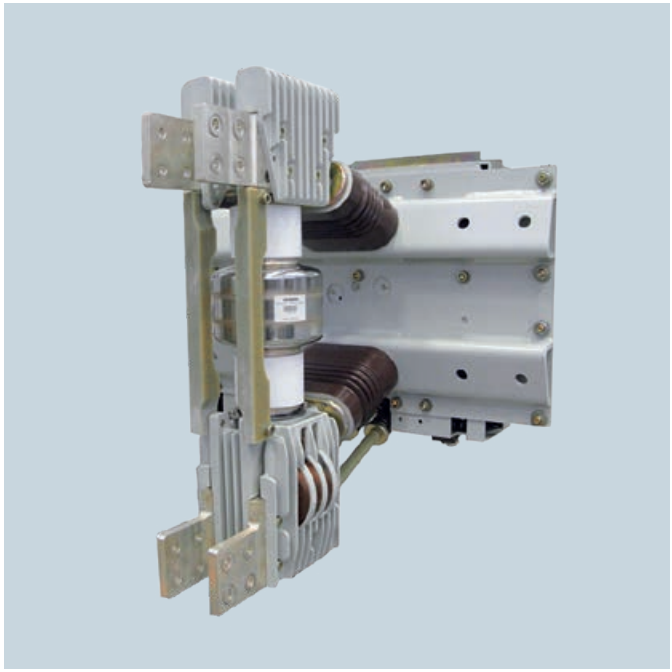

R-HG11-218.tif

90 kA generator circuit-breaker (one phase shown)

Contents | Page

Technical Data 33

Electrical data, dimensions, weights and dimension drawings circuit-breakers according to IEC 62271-100

Voltage level 7.2 kV 34
Voltage level 12 kV 36
Voltage level 17.5 kV 38
Voltage level 24 kV 40
Voltage level 36 kV 42
Voltage level 40.5 kV 44

Electrical data, dimensions, weights and dimension drawings high-current and generator circuit-breakers according to IEC/IEEE 62271-37-013

Voltage level 17.5 kV 46
Voltage level 24 kV 48

Circuit diagrams 50

Operating times, short-circuit protection of motors, consumption data of releases 52

3

7.2 kV 50/60 Hz Order No.	Rated normal current I_r A	Pole-centre distance mm	Rated operating sequence: O – 3 min – CO – 3 min – CO	O – 0.3 s – CO – 3 min – CO	O – 0.3 s – CO – 15 s – CO	Rated duration of short-circuit t_k s	Rated short-circuit breaking current I_{sc} kA	DC component in % of the rated short-circuit breaking current %	Asymmetrical breaking current kA	Rated short-circuit making current (at 50/60 Hz) I_{ma} kA	Rated back-to-back capacitor bank making current I_{bi} kA Peak	Rated lightning impulse withstand voltage U_p kV	Rated short-duration power-frequency withstand voltage U_d kV	Voltage drop ΔU between connections (according to IEC 62271-1 at DC 100 A) mV	Minimum creepage distance, interrupter mm	Minimum creepage distance, phase-to-earth mm	Minimum clearance, phase-to-phase mm	Minimum clearance, phase-to-earth mm	Weights kg	Detailed dimension drawing (can be ordered)	Operating cycle diagram no. (see page 35)	Catalog dimension drawing no. (see page 35)
3AH3 057-2...	1250	210	■	△	△	3	50	36	56.1	125/130	20	60	20	1.8	160	144	97	113	180	A7E32500415	1	1
3AH3 057-4...	2000	210	■	△	△	3	50	36	56.1	125/130	20	60	20	1.8	160	144	80	130	180	A7E32500415	1	1
3AH3 057-6...	2500	210	■	△	△	3	50	36	56.1	125/130	20	60	20	1.8	160	144	80	113	180	A7E32500417	1	2
3AH3 057-7...	3150	210	■	△	△	3	50	36	56.1	125/130	10	60	20	1.8	160	150	80	104	180	A7E32500001	1	2
3AH3 077-8...	4000	275	■	△	△	3	50	36	56.1	125/130	10	60	20	1.4	160	170	71	116	308	A7E32500004	1	4
3AH3 078-2...	1250	275	■	△	△	3	63	36	70.7	160/164	10	60	20	1.8	160	170	71	130	196	A7E32500003	2	3
3AH3 078-6...	2500	275	■	△	△	3	63	36	70.7	160/164	10	60	20	1.8	160	170	71	130	196	A7E32500003	2	3
3AH3 078-7...	3150	275	■	△	△	3	63	36	70.7	160/164	10	60	20	1.8	160	170	71	130	196	A7E32500003	2	3
3AH3 078-8...	4000	275	■	△	△	3	63	36	70.7	160/164	10	60	20	1.4	160	170	71	116	308	A7E32500004	2	4

■ Standard data on the rating plate
△ Rated operating sequence possible up to I_{SC} = 31.5 kA

3

Operating cycle diagram for 7.2 kV

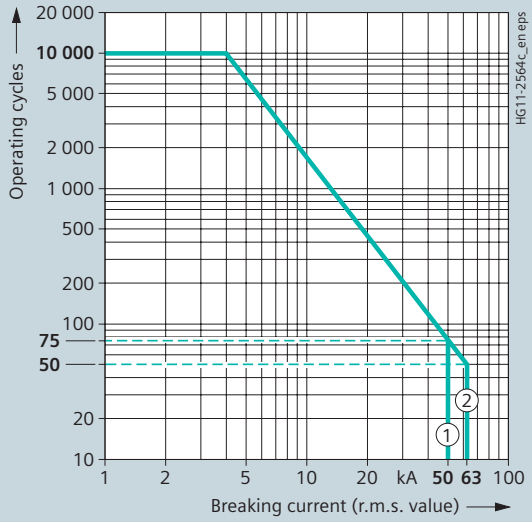

The permissible number of electrical operating cycles is shown as a function of the breaking current (r.m.s. value). All vacuum circuit-breakers fulfil the endurance classes E2, M2 and C2 according to IEC 62271-100. The curve shape beyond the parameters defined in IEC 62271-100 is based on average experience data. The number of operating cycles that can actually be reached can be different depending on the respective application.

Dimension drawings for 7.2 kV

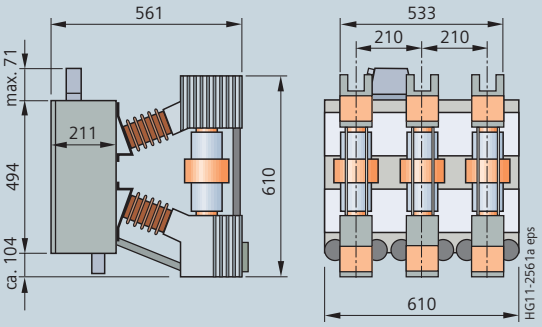

Dimension drawing 1

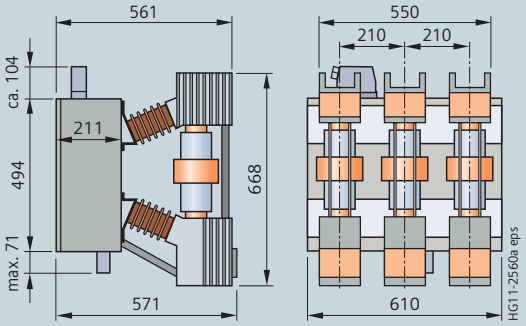

Dimension drawing 2

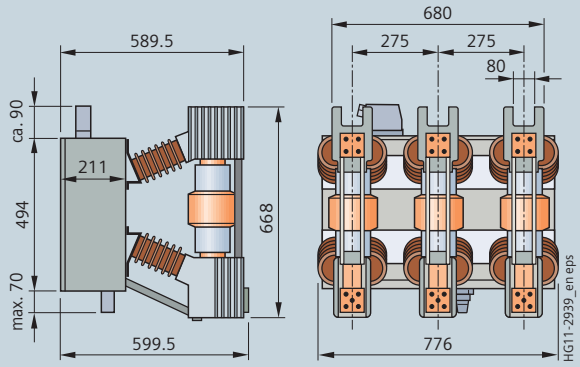

Dimension drawing 3

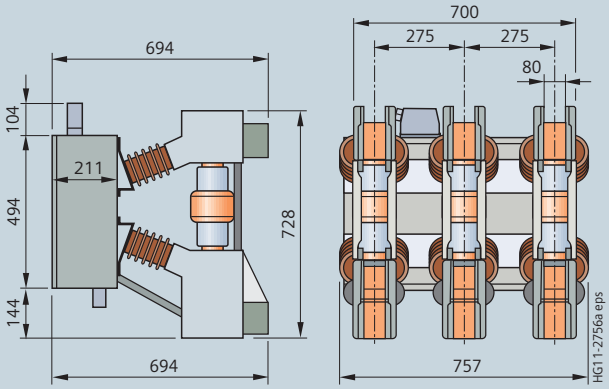

Dimension drawing 4

3

12 kV 50/60 Hz Order No.	Rated normal current I_r	Pole-centre distance	Rated operating sequence: O – 3 min – CO – 3 min – CO	O – 0.3 s – CO – 3 min – CO	O – 0.3 s – CO – 15 s – CO	Rated duration of short-circuit t_k	Rated short-circuit breaking current I_{sc}	DC component in % of the rated short-circuit breaking current	Asymmetrical breaking current	Rated short-circuit making current (at 50/60 Hz) I_{ma}	Rated back-to-back capacitor bank making current I_{bi}	Rated lightning impulse withstand voltage U_p	Rated short-duration power-frequency withstand voltage U_d	Voltage drop ΔU between connections (according to IEC 62271-1 at DC 100 A)	Minimum creepage distance, interrupter	Minimum creepage distance, phase-to-earth	Minimum clearance, phase-to-phase	Minimum clearance, phase-to-earth	Weights	Detailed dimension drawing (can be ordered)	Operating cycle diagram no. (see page 37)	Catalog dimension drawing no. (see page 37)
	A	mm				s	kA	%	kA	kA	kA Peak	kV	kV	mV	mm	mm	mm	mm	kg			
3AH3 117-2...	1250	210	■	△	△	3	50	36	56.1	125/130	20	75	28	1.8	160	144	97	113	180	A7E32500415	1	1
3AH3 117-4...	2000	210	■	△	△	3	50	36	56.1	125/130	20	75	28	1.8	160	144	80	130	180	A7E32500415	1	1
3AH3 117-6...	2500	210	■	△	△	3	50	36	56.1	125/130	20	75	28	1.8	160	144	80	113	180	A7E32500417	1	2
3AH3 117-7...	3150	210	■	△	△	3	50	36	56.1	125/130	10	75	28	1.8	160	150	80	104	180	A7E32500001	1	2
3AH3 127-8...	4000	275	■	△	△	3	50	36	56.1	125/130	10	75	28	1.4	160	170	71	116	308	A7E32500004	1	4
3AH3 128-2...	1250	275	■	△	△	3	63	36	70.7	160/164	10	75	28	1.8	160	170	71	130	196	A7E32500003	2	3
3AH3 128-6...	2500	275	■	△	△	3	63	36	70.7	160/164	10	75	28	1.8	160	170	71	130	196	A7E32500003	2	3
3AH3 128-7...	3150	275	■	△	△	3	63	36	70.7	160/164	10	75	28	1.8	160	170	71	130	196	A7E32500003	2	3
3AH3 128-8...	4000	275	■	△	△	3	63	36	70.7	160/164	10	75	28	1.4	160	170	71	116	308	A7E32500004	2	4

■ Standard data on the rating plate
△ Rated operating sequence possible up to I_{SC} = 31.5 kA

3

Operating cycle diagram for 12 kV

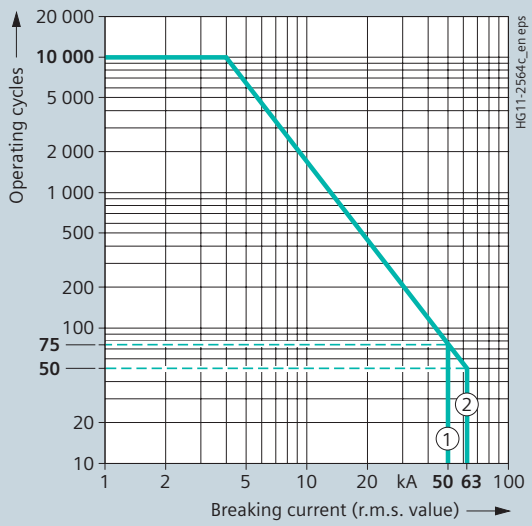

The permissible number of electrical operating cycles is shown as a function of the breaking current (r.m.s. value). All vacuum circuit-breakers fulfil the endurance classes E2, M2 and C2 according to IEC 62271-100. The curve shape beyond the parameters defined in IEC 62271-100 is based on average experience data. The number of operating cycles that can actually be reached can be different depending on the respective application.

Dimension drawings for 12 kV

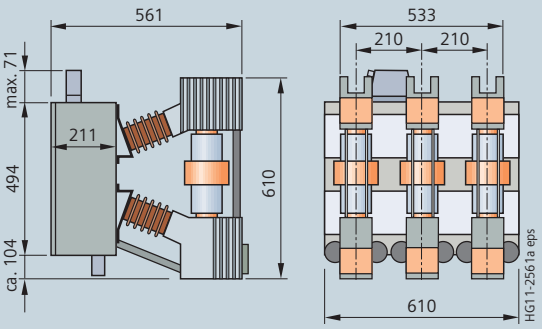

Dimension drawing 1

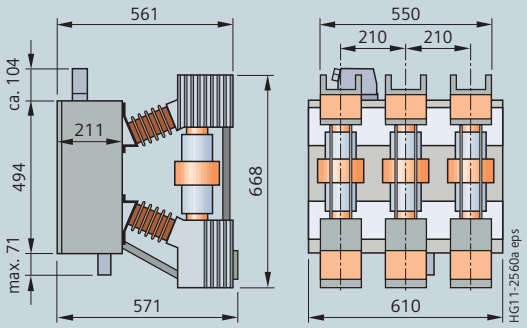

Dimension drawing 2

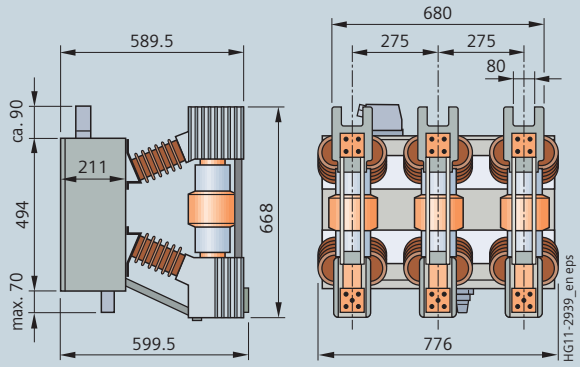

Dimension drawing 3

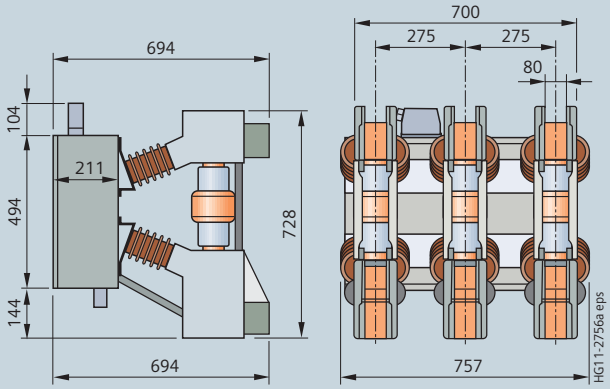

Dimension drawing 4

3

17.5 kV 50/60 Hz Order No.	Rated normal current I_r	Pole-centre distance	Rated operating sequence: O – 3 min – CO – 3 min – CO	O – 0.3 s – CO – 3 min – CO	O – 0.3 s – CO – 15 s – CO	Rated duration of short-circuit t_k	Rated short-circuit breaking current I_{sc}	DC component in % of the rated short-circuit breaking current	Asymmetrical breaking current	Rated short-circuit making current (at 50/60 Hz) I_{ma}	Rated back-to-back capacitor bank making current I_{bi}	Rated lightning impulse withstand voltage U_p	Rated short-duration power-frequency withstand voltage U_d	Voltage drop ΔU between connections (according to IEC 62271-1 at DC 100 A)	Minimum creepage distance, interrupter	Minimum creepage distance, phase-to-earth	Minimum clearance, phase-to-phase	Minimum clearance, phase-to-earth	Weights	Detailed dimension drawing (can be ordered)	Operating cycle diagram no. (see page 39)	Catalog dimension drawing no. (see page 39)
	A	mm				s	kA	%	kA	kA	kA Peak	kV	kV	mV	mm	mm	mm	mm	kg			
3AH3 217-2...	1250	210	■	△	△	3	50	36	56.1	125/130	20	95	38	1.8	160	144	285	113	184	A7E32500416	5	5
3AH3 217-4...	2000	210	■	△	△	3	50	36	56.1	125/130	20	95	38	1.8	160	144	110	130	184	A7E32500416	5	5
3AH3 217-6...	2500	210	■	△	△	3	50	36	56.1	125/130	20	95	38	1.8	160	144	176	113	184	A7E32500418	5	6
3AH3 217-7...	3150	210	■	△	△	3	50	36	56.1	125/130	10	95	38	1.8	160	150	176	104	184	A7E32500002	5	6
3AH3 227-8...	4000	275	■	△	△	3	50	36	56.1	125/130	10	95	38	1.4	160	170	115	116	310	A7E32500006	5	8
3AH3 228-2...	1250	275	■	△	△	3	63	36	70.7	160/163.8	10	95	38	1.8	160	170	145	130	198	A7E32500005	6	7
3AH3 228-6...	2500	275	■	△	△	3	63	36	70.7	160/163.8	10	95	38	1.8	160	170	145	130	198	A7E32500005	6	7
3AH3 228-7...	3150	275	■	△	△	3	63	36	70.7	160/163.8	10	95	38	1.8	160	170	145	130	198	A7E32500005	6	7
3AH3 228-8...	4000	275	■	△	△	3	63	36	70.7	160/163.8	10	95	38	1.4	160	170	115	116	310	A7E32500006	6	8

■ Standard data on the rating plate
△ Rated operating sequence possible up to I_{SC} = 31.5 kA

Operating cycle diagram for 17.5 kV

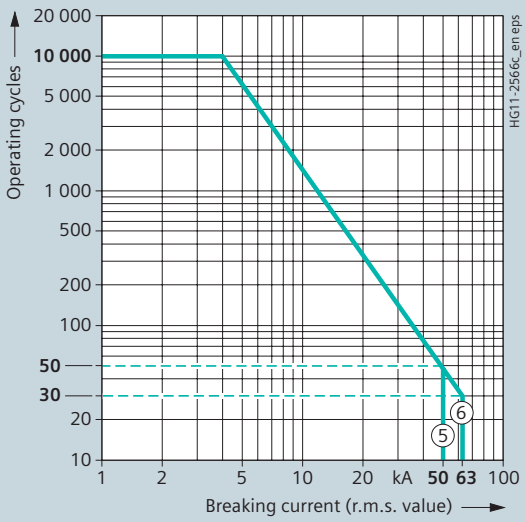

The permissible number of electrical operating cycles is shown as a function of the breaking current (r.m.s. value). All vacuum circuit-breakers fulfil the endurance classes E2, M2 and C2 according to IEC 62271-100. The curve shape beyond the parameters defined in IEC 62271-100 is based on average experience data. The number of operating cycles that can actually be reached can be different depending on the respective application.

Dimension drawings for 17.5 kV

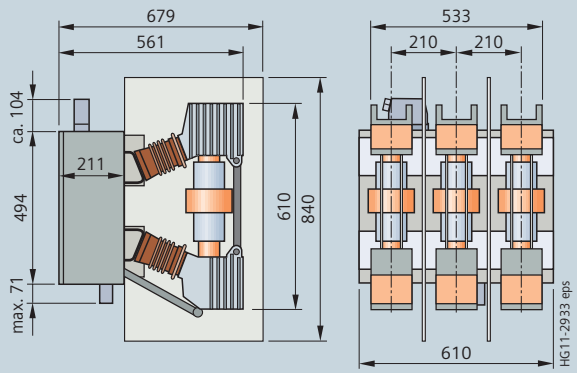

Dimension drawing 5

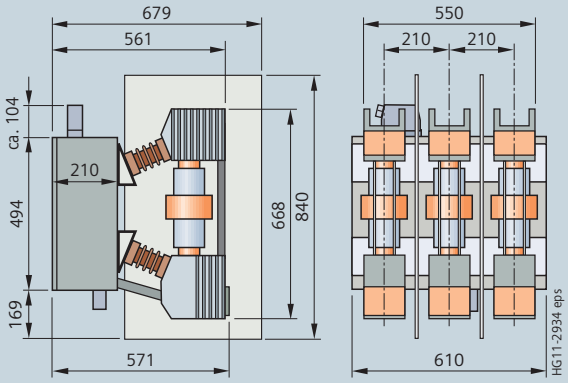

Dimension drawing 6

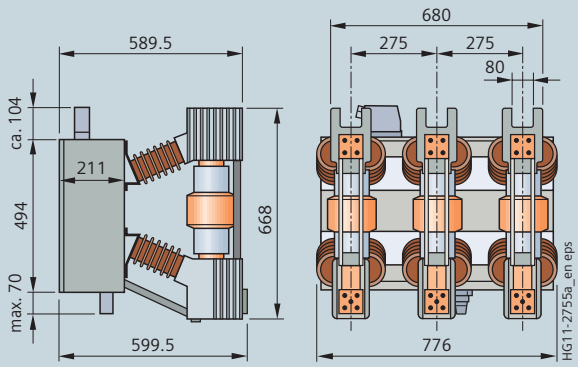

Dimension drawing 7

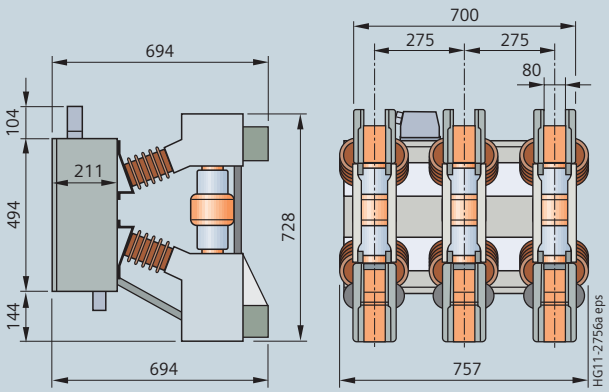

Dimension drawing 8

3

24 kV 50/60 Hz Order No.	**Rated normal current** I_r A	**Pole-centre distance** mm	Rated operating sequence: O – 3 min – CO – 3 min – CO	O – 0.3 s – CO – 3 min – CO	O – 0.3 s – CO – 15 s – CO	Rated duration of short-circuit t_k s	Rated short-circuit breaking current I_{sc} kA	DC component in % of the rated short-circuit breaking current %	Asymmetrical breaking current kA	Rated short-circuit making current (at 50/60 Hz) I_{ma} kA	Rated back-to-back capacitor bank making current I_{bi} kA Peak	Rated lightning impulse withstand voltage U_p kV	Rated short-duration power-frequency withstand voltage U_d kV	Voltage drop ΔU between connections (according to IEC 62271-1 at DC 100 A) mV	Minimum creepage distance, interrupter mm	Minimum creepage distance, phase-to-earth mm	Minimum clearance, phase-to-phase mm	Minimum clearance, phase-to-earth mm	Weights kg	Detailed dimension drawing (can be ordered)	Operating cycle diagram no. (see page 41)	Catalog dimension drawing no. (see page 41)
3AH3 266-6...	2500	275	■	△	△	3	40	36	44.9	100/104	20	125	50	2.0	360	226	245	150	168	A7E32500007	7	9
3AH3 266-7...[1]	3150	275	■	△	△	3	40	36	44.9	100/104	20	125	50	2.0	360	226	244	163	165	A7E32500007	7	9
3AH3 267-7...	3150	275	■	△	△	3	50	36	56.1	125/130	10	110[1]	50	1.5	161	170	228	180	198	A7E32500034	8	10
3AH3 367-8...	4000	300	■	△	△	3	50	36	56.1	125/130	10	125	50	1.5	161	207	211	160	350	A7E32500596	8	11

■ Standard data on the rating plate
△ Rated operating sequence possible up to I_{SC} = 31.5 kA

1) Deviating from standard value

3

Operating cycle diagram for 24 kV

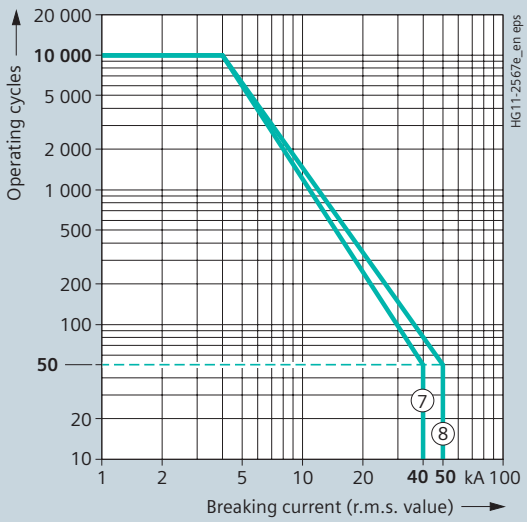

The permissible number of electrical operating cycles is shown as a function of the breaking current (r.m.s. value). All vacuum circuit-breakers fulfil the endurance classes E2, M2 and C2 according to IEC 62271-100. The curve shape beyond the parameters defined in IEC 62271-100 is based on average experience data. The number of operating cycles that can actually be reached can be different depending on the respective application.

Dimension drawings for 24 kV

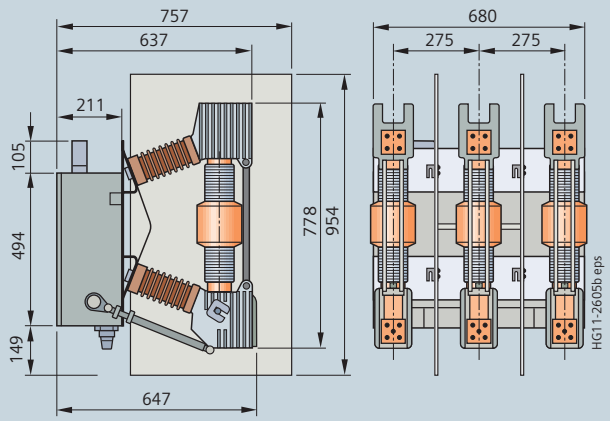

Dimension drawing 9

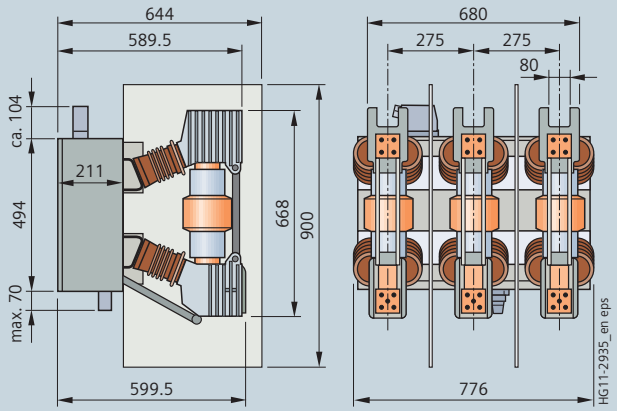

Dimension drawing 10

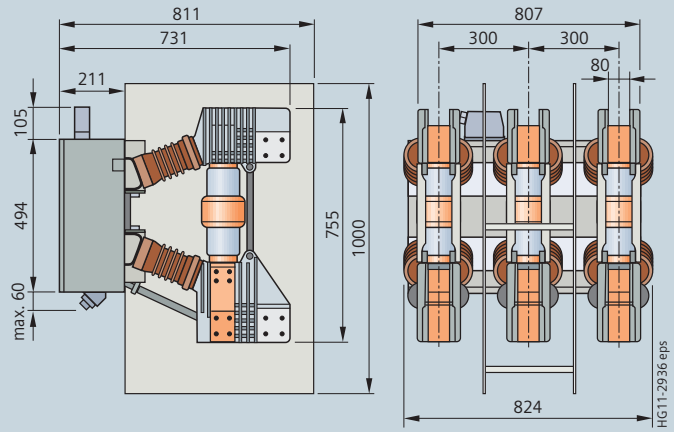

Dimension drawing 11

3

36 kV 50/60 Hz Order No.	Rated normal current I_r A	Pole-centre distance mm	Rated operating sequence: O – 3 min – CO – 3 min – CO	O – 0.3 s – CO – 3 min – CO	O – 0.3 s – CO – 15 s – CO	Rated duration of short-circuit t_k s	Rated short-circuit breaking current I_{sc} kA	DC component in % of the rated short-circuit breaking current %	Asymmetrical breaking current kA	Rated short-circuit making current (at 50/60 Hz) I_{ma} kA	Rated back-to-back capacitor bank making current I_{bi} kA Peak	Rated lightning impulse withstand voltage U_p kV	Rated short-duration power-frequency withstand voltage U_d kV	Voltage drop ΔU between connections (according to IEC 62271-1 at DC 100 A) mV	Minimum creepage distance, interrupter mm	Minimum creepage distance, phase-to-earth mm	Minimum clearance, phase-to-phase mm	Minimum clearance, phase-to-earth mm	Weights kg	Detailed dimension drawing (can be ordered)	Operating cycle diagram no. (see page 43)	Catalog dimension drawing no. (see page 43 and 45)
3AH3 305-2...	1250	350	□	■	○	3	31.5	36	35.4	80/82	10	170	70	2.3	360	420	317	256	170	A7E32500008	10	12
3AH3 305-4...	2000	350	□	■	○	3	31.5	36	35.4	80/82	10	170	70	2.3	360	330	317	256	175	A7E32500008	10	12
3AH3 305-6...	2500	350	□	■	○	3	31.5	36	35.4	80/82	10	170	70	2.3	360	330	317	264	175	A7E32500009	10	13
3AH3 305-7...	3150	350	□	■	○	3	31.5	36	35.4	80/82	10	170	70	1.9	360	365	294	260	350	A7E32500058	10	14
3AH3 305-8...	4000	350	□	■	○	3	31.5	36	35.4	80/82	20	170	70	1.9	360	365	294	260	350	A7E32500058	10	14
3AH3 306-6...	2500	350	■	△	△	3	40	36	44.9	100/104	20	170	70	2.0	360	330	317	256	175	A7E32500009	9	13
3AH3 306-7...	3150	350	■	△	△	3	40	36	44.9	100/104	20	170	70	1.9	360	365	294	260	350	A7E32500058	9	14
3AH3 306-8...	4000	350	■	△	△	3	40	36	44.9	100/104	20	170	70	1.9	360	365	294	260	350	A7E32500058	9	14
3AH3 305-2...-Z E14+E15	1250	350	□	■	○	3	31.5	36	35.4	80/82	10	185	85	2.3	360	420	317	257	170	A7E32500008	10	12
3AH3 305-4...-Z E14+E15	2000	350	□	■	○	3	31.5	36	35.4	80/82	10	185	85	2.3	360	420	317	257	175	A7E32500008	10	12
3AH3 305-6...-Z E14+E15	2500	350	□	■	○	3	31.5	36	35.4	80/82	10	185	85	2.3	360	420	317	257	180	A7E32500009	10	13
3AH3 305-7...-Z E14+E15	3150	350	□	■	○	3	31.5	36	35.4	80/82	10	185	85	1.9	360	365	304	259	380	A7E32500058	10	14
3AH3 305-8...-Z E14+E15	4000	350	□	■	○	3	31.5	36	35.4	80/82	20	185	85	1.9	360	365	304	259	380	A7E32500058	10	14
3AH3 306-6...-Z E14+E15	2500	350	■	△	△	3	40	36	44.9	100/104	20	185	85	2.3	360	420	317	257	180	A7E32500009	9	13
3AH3 306-7...-Z E14+E15	3150	350	■	△	△	3	40	36	44.9	100/104	20	185	85	1.9	360	365	304	259	380	A7E32500058	9	14
3AH3 306-8...-Z E14+E15	4000	350	■	△	△	3	40	36	44.9	100/104	20	185	85	1.9	360	365	304	259	380	A7E32500058	9	14
3AH3 305-2...-Z E24+E25	1250	350	□	■	○	3	31.5	36	35.4	80/82	20	195	95	2.3	360	420	311	264	170	A7E32500554	10	15
3AH3 305-4...-Z E24+E25	2000	350	□	■	○	3	31.5	36	35.4	80/82	20	195	95	2.3	360	420	309	272	175	A7E32500554	10	15
3AH3 305-6...-Z E24+E25	2500	350	□	■	○	3	31.5	36	35.4	80/82	20	195	95	2.3	360	420	304	273	180	A7E32500553	10	16
3AH3 306-6...-Z E24+E25	2500	350	■	△	△	3	40	36	44.9	100/104	20	195	95	2.3	360	420	304	273	180	A7E32500553	10	16

■ Standard data on the rating plate
□ Possible with order number suffix Z and order code F27
○ Possible with order number suffix Z and order code F28
△ Rated operating sequence possible up to I_{SC} = 31.5 kA

3

Operating cycle diagram for 36 kV

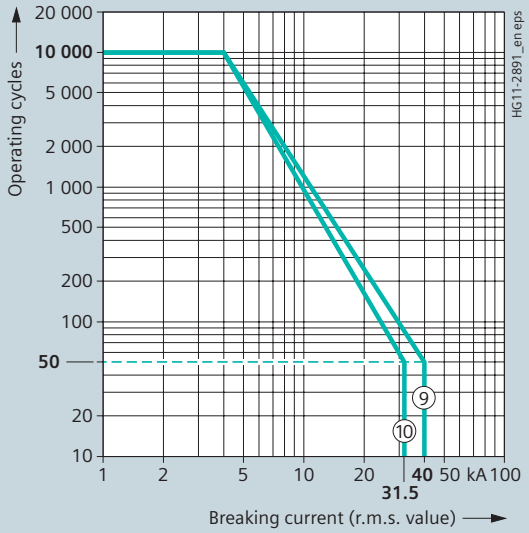

The permissible number of electrical operating cycles is shown as a function of the breaking current (r.m.s. value). All vacuum circuit-breakers fulfil the endurance classes E2, M2 and C2 according to IEC 62271-100. The curve shape beyond the parameters defined in IEC 62271-100 is based on average experience data. The number of operating cycles that can actually be reached can be different depending on the respective application.

Dimension drawings for 36 kV and 40.5 kV

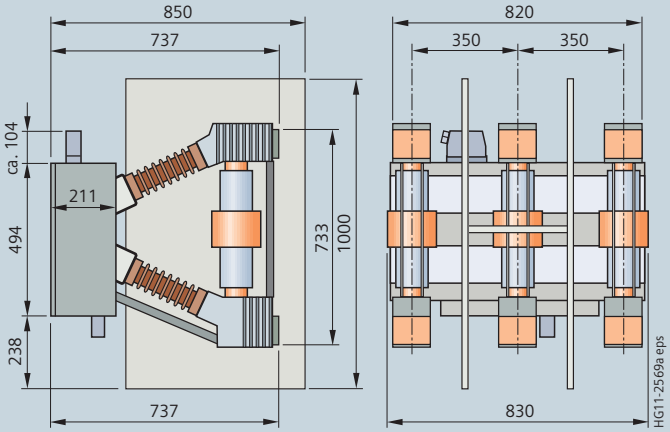

Dimension drawing 12

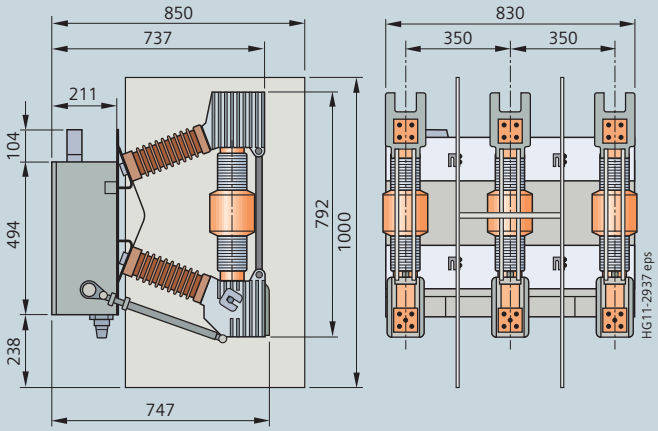

Dimension drawing 13

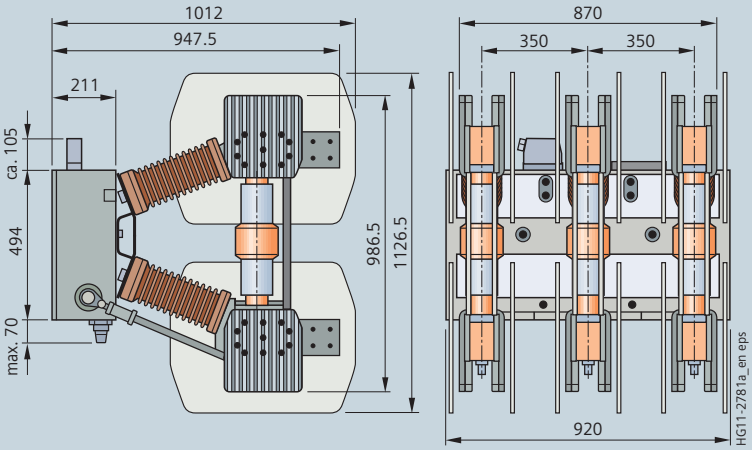

Dimension drawing 14

3

40.5 kV 50/60 Hz Order No.	Rated normal current I_r A	Pole-centre distance mm	Rated operating sequence: O – 3 min – CO – 3 min – CO	O – 0.3 s – CO – 3 min – CO	O – 0.3 s – CO – 15 s – CO	Rated duration of short-circuit t_k s	Rated short-circuit breaking current I_{sc} kA	DC component in % of the rated short-circuit breaking current %	Asymmetrical breaking current kA	Rated short-circuit making current (at 50/60 Hz) I_{ma} kA	Rated back-to-back capacitor bank making current I_{bi} kA Peak	Rated lightning impulse withstand voltage U_p kV	Rated short-duration power-frequency withstand voltage U_d kV	Voltage drop ΔU between connections (according to IEC 62271-1 at DC 100 A) mV	Minimum creepage distance, interrupter mm	Minimum creepage distance, phase-to-earth mm	Minimum clearance, phase-to-phase mm	Minimum clearance, phase-to-earth mm	Weights kg	Detailed dimension drawing (can be ordered)	Operating cycle diagram no. (see page 45)	Catalog dimension drawing no. (see page 43 and 45)
3AH3 305-2...-Z Y09+E14+E15	1250	350	□	■	○	3	31.5	36	35.4	80/82	10	185	85	2.3	360	420	317	257	170	A7E32500008	10	12
3AH3 305-4...-Z Y09+E14+E15	2000	350	□	■	○	3	31.5	36	35.4	80/82	10	185	85	2.3	360	420	317	257	175	A7E32500008	10	12
3AH3 305-6...-Z Y09+E14+E15	2500	350	□	■	○	3	31.5	36	35.4	80/82	10	185	85	2.3	360	420	317	257	180	A7E32500009	10	13
3AH3 305-7...-Z Y09+E14+E15	3150	350	□	■	○	3	31.5	36	35.4	80/82	10	185	85	1.9	360	365	304	259	380	A7E32500058	10	14
3AH3 305-8...-Z Y09+E14+E15	4000	350	□	■	○	3	31.5	36	35.4	80/82	20	185	85	1.9	360	365	304	259	380	A7E32500058	10	14
3AH3 306-6...-Z Y09+E14+E15	2500	350	■	△	△	3	40	36	44.9	100/104	20	185	85	2.3	360	420	317	257	180	A7E32500009	9	13
3AH3 306-7...-Z Y09+E14+E15	3150	350	■	△	△	3	40	36	44.9	100/104	20	185	85	1.9	360	365	304	259	380	A7E32500058	9	14
3AH3 306-8...-Z Y09+E14+E15	4000	350	■	△	△	3	40	36	44.9	100/104	20	185	85	1.9	360	365	304	259	380	A7E32500058	9	14
3AH3 305-2...-Z Y09+E24+E25	1250	350	□	■	○	3	31.5	36	35.4	80/82	20	195	95	2.3	360	420	311	264	170	A7E32500554	10	15
3AH3 305-4...-Z Y09+E24+E25	2000	350	□	■	○	3	31.5	36	35.4	80/82	20	195	95	2.3	360	420	309	272	175	A7E32500554	10	15
3AH3 305-6...-Z Y09+E24+E25	2500	350	□	■	○	3	31.5	36	35.4	80/82	20	195	95	2.3	360	420	304	273	180	A7E32500553	10	16
3AH3 306-6...-Z Y09+E24+E25	2500	350	■	△	△	3	40	36	44.9	100/104	20	195	95	2.3	360	420	304	273	180	A7E32500553	9	16

■ Standard data on the rating plate
□ Possible with order number suffix Z and order code F27
○ Possible with order number suffix Z and order code F28
△ Rated operating sequence possible up to I_{SC} = 31.5 kA

3

Operating cycle diagram for 40.5 kV

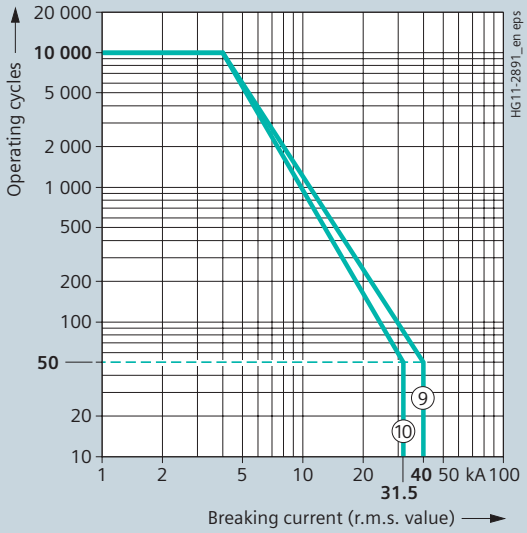

The permissible number of electrical operating cycles is shown as a function of the breaking current (r.m.s. value). All vacuum circuit-breakers fulfil the endurance classes E2, M2 and C2 according to IEC 62271-100. The curve shape beyond the parameters defined in IEC 62271-100 is based on average experience data. The number of operating cycles that can actually be reached can be different depending on the respective application.

Dimension drawings for 36 kV and 40.5 kV

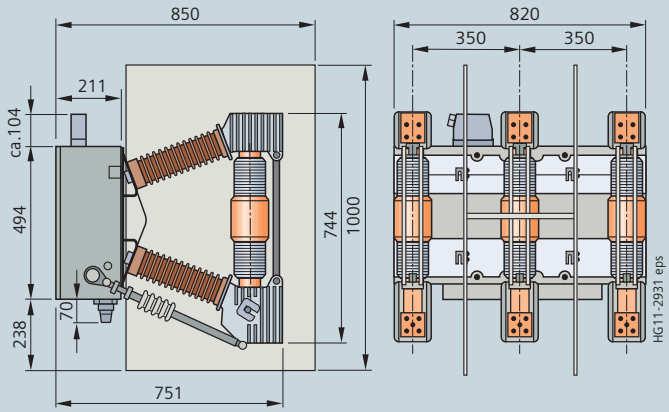

Dimension drawing 15

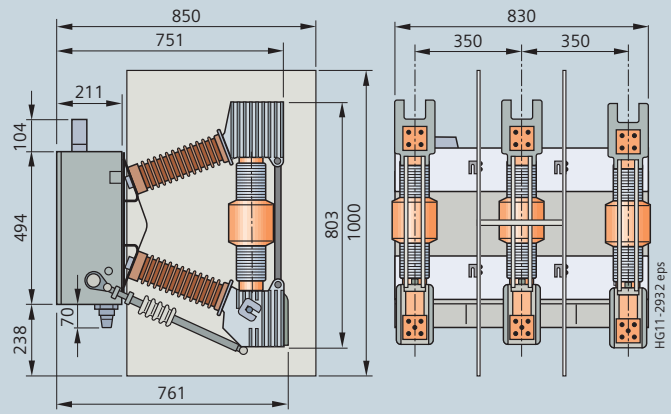

Dimension drawing 16

3

17.5 kV 50/60 Hz Order No.	Rated normal current I_r	Pole-centre distance	Rated operating sequence: 2) O – 3 min – CO – 3 min – CO	O – 30 min – CO	Rated duration of short-circuit t_k	System side: Rated short-circuit breaking current I_{SC}	DC component in % of the rated short-circuit breaking current	Asymmetrical breaking current	Generator side: Rated short-circuit breaking current $I_{SC\,gen}$	DC component in % of the rated short-circuit breaking current	Asymmetrical breaking current	Rated short-circuit making current (at 50/60 Hz) I_{ma}	Rated lightning impulse withstand voltage U_p	Rated short-duration power-frequency withstand voltage U_d	Voltage drop ΔU between connections (according to IEC 62271-1 at DC 100 A)	Minimum creepage distance, interrupter	Minimum creepage distance, phase-to-earth	Minimum clearance, phase-to-phase	Minimum clearance, phase-to-earth	Weights	Detailed dimension drawing (can be ordered)	Catalog dimension drawing no. (see page 47)
	A	mm			s	kA	%	kA	kA	%	kA	kA	kV	kV	mV	mm	mm	mm	mm	kg		
3AH3 817-7...	3150	275	□	■	3	50	75	73	25	130	52	137	110	50	1.4	160	170	194	154	230	A7E32500592	17
3AH3 817-8...	4000	275	□	■	3	50	75	73	25	130	52	137	110	50	1.4	160	170	217	116	320	A7E32500593	18
3AH3 712-4...	5000	300	□	■	3	50	75	73	25	130	52	137	110	50	1.4	160	210	230	157	470	A7E32500587	19
3AH3 712-5...	6300	300	□	■	3	50	75	73	25	130	52	137	110	50	1.4	160	210	230	157	500	A7E32500587	19
3AH3 712-6...	8000 1)	300	□	■	3	50	75	73	25	130	52	137	110	50	1.4	160	210	230	230	500	A7E32500587	19
3AH3 818-7...	3150	275	□	■	3	63	70	89	31.5	130	66	173	110	50	1.4	160	170	194	115	230	A7E32500019	17
3AH3 818-8...	4000	275	□	■	3	63	70	89	31.5	130	66	173	110	50	1.4	160	170	217	116	320	A7E32500030	18
3AH3 713-4...	5000	300	□	■	3	63	70	89	31.5	130	66	173	110	50	1.4	160	210	230	157	470	A7E32500588	19
3AH3 713-5...	6300	300	□	■	3	63	70	89	31.5	130	66	173	110	50	1.4	160	210	230	157	500	A7E32500588	19
3AH3 713-6...	8000 1)	300	□	■	3	63	70	89	31.5	130	66	173	110	50	1.4	160	230	230	230	500	A7E32500588	19
3AH3 819-7...	3150	275	□ 3)	■	3	72	70	101	36	130	75	197	110	50	1.4	160	170	194	115	250	A7E32500019	17
3AH3 819-8...	4000	275	□ 3)	■	3	72	70	101	36	130	75	197	110	50	1.4	160	170	217	116	320	A7E32500030	18
3AH3 714-4...	5000	300	□ 3)	■	3	72	70	101	36	130	75	197	110	50	1.4	160	210	230	157	470	A7E32500589	19
3AH3 714-5...	6300	300	□ 3)	■	3	72	70	101	36	130	75	197	110	50	1.4	160	210	230	157	500	A7E32500589	19
3AH3 714-6...	8000 1)	300	□ 3)	■	3	72	70	101	36	130	75	197	110	50	1.4	160	230	230	230	500	A7E32500589	19

■ Standard data on the rating plate (other operating sequences on request)
□ Possible with order number suffix Z and order code F27

1) With forced cooling
2) Rated operating sequence, short-circuit: CO – 30 min – CO
Rated operating sequence, normal current: CO – 3 min – CO
Rated operating sequence, mechanical (de-energized): CO – 1 min – CO
3) On request

For three-circuit-breaker-solution for "phase-segregated" design, see page 12

Number of operating cycles

The maximum permissible number of mechanical operating cycles is 10,000. Short-circuit breaking operations have been tested and proved under various conditions according to IEC/IEEE 62271-37-013. As regards the electrical endurance, values ranging beyond this depend on the specific case of application.

Dimension drawings for high-current and generator circuit-breakers 17.5 kV

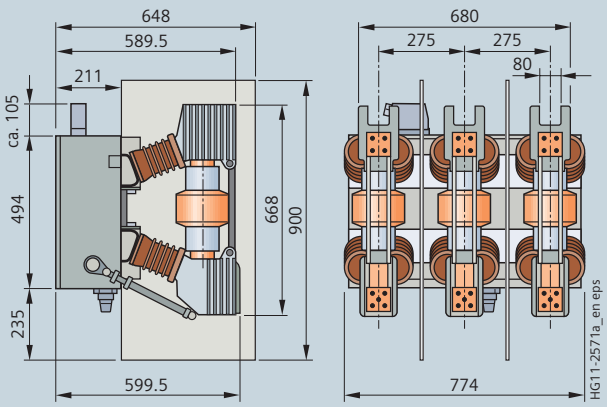

Dimension drawing 17

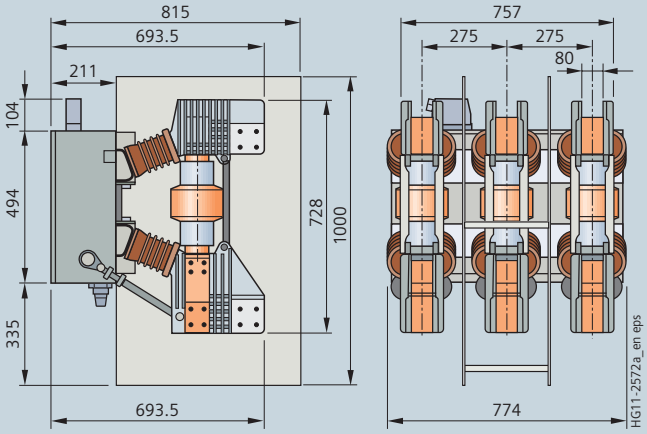

Dimension drawing 18

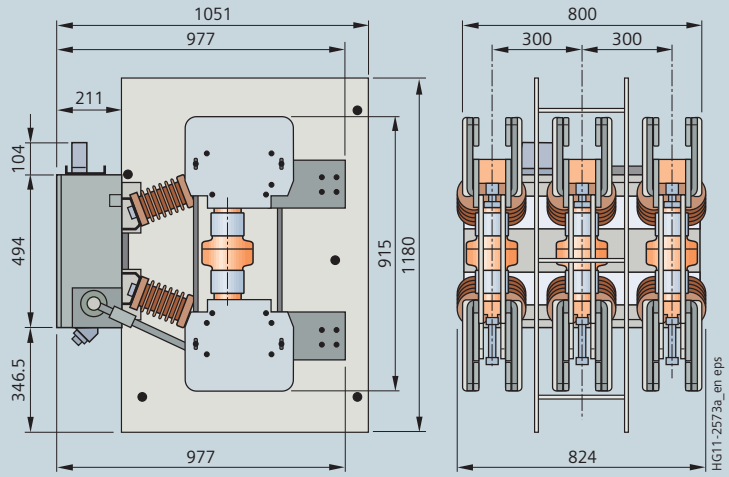

Dimension drawing 19

3

24 kV 50/60 Hz Order No.	Rated normal current I_r	Pole-centre distance	Rated operating sequence: 2) O – 3 min – CO – 3 min – CO	O – 30 min – CO	Rated duration of short-circuit t_k	System side: Rated short-circuit breaking current I_{SC}	DC component in % of the rated short-circuit breaking current	Asymmetrical breaking current	Generator side: Rated short-circuit breaking current $I_{SC\,gen}$	DC component in % of the rated short-circuit breaking current	Asymmetrical breaking current	Rated short-circuit making current (at 50/60 Hz) I_{ma}	Rated lightning impulse withstand voltage U_p	Rated short-duration power-frequency withstand voltage U_d	Voltage drop ΔU between connections (according to IEC 62271-1 at DC 100 A)	Minimum creepage distance, interrupter	Minimum creepage distance, phase-to-earth	Minimum clearance, phase-to-phase	Minimum clearance, phase-to-earth	Weights	Detailed dimension drawing (can be ordered)	Catalog dimension drawing no. (see page 49)
	A	mm			s	kA	%	kA	kA	%	kA	kA	kV	kV	mV	mm	mm	mm	mm	kg		
3AH3 722-2...	3150	300	□	■	3	50	75	73	25	130	52	137	125	60	1.6	160	210	211	160	350	A7E32500913	20
3AH3 722-3...	4000	300	□	■	3	50	75	73	25	130	52	137	125	60	1.6	160	210	211	160	350	A7E32500597	20
3AH3 722-4...	5000	300	□	■	3	50	75	73	25	130	52	137	125	60	1.6	160	210	231	157	470	A7E32500914	21
3AH3 722-5...	6300	300	□	■	3	50	75	73	25	130	52	137	125	60	1.6	160	210	231	157	500	A7E32500910	21
3AH3 722-6...	8000 1)	300	□	■	3	50	75	73	25	130	52	137	125	60	1.6	160	207	293	170	500	A7E32500910	21
3AH3 723-2...	3150	300	□	■	3	63	70	89	31.5	130	66	173	125	60	1.6	160	210	212	156	350	A7E32500915	20
3AH3 723-3...	4000	300	□	■	3	63	70	89	31.5	130	66	173	125	60	1.6	160	210	212	156	350	A7E32500909	20
3AH3 723-4...	5000	300	□	■	3	63	70	89	31.5	130	66	173	125	60	1.6	160	210	231	157	470	A7E32500916	21
3AH3 723-5...	6300	300	□	■	3	63	70	89	31.5	130	66	173	125	60	1.6	160	210	231	157	500	A7E32500911	21
3AH3 723-6...	8000 1)	300	□	■	3	63	70	89	31.5	130	66	173	125	60	1.6	160	207	293	170	500	A7E32500911	21
3AH3 724-2...	3150	300	□ 3)	■	3	72	70	101	36	130	75	197	125	60	1.6	160	210	212	156	350	A7E32500917	20
3AH3 724-3...	4000	300	□ 3)	■	3	72	70	101	36	130	75	197	125	60	1.6	160	210	212	156	350	A7E32500918	20
3AH3 724-4...	5000	300	□ 3)	■	3	72	70	101	36	130	75	197	125	60	1.6	160	210	231	157	470	A7E32500919	21
3AH3 724-5...	6300	300	□ 3)	■	3	72	70	101	36	130	75	197	125	60	1.6	160	210	231	157	500	A7E32500920	21
3AH3 724-6...	8000 1)	300	□ 3)	■	3	72	70	101	36	130	75	197	125	60	1.6	160	207	293	170	500	A7E32500920	21

■ Standard data on the rating plate (other operating sequences on request)
□ Possible with order number suffix Z and order code F27

1) With forced cooling
2) Rated operating sequence, short-circuit: CO – 30 min – CO
Rated operating sequence, normal current: CO – 3 min – CO
Rated operating sequence, mechanical (de-energized): CO – 1 min – CO
3) On request

Number of operating cycles

The maximum permissible number of mechanical operating cycles is 10,000. Short-circuit breaking operations have been tested and proved under various conditions according to IEC/IEEE 62271-37-013. As regards the electrical endurance, values ranging beyond this depend on the specific case of application.

Dimension drawings for high-current and generator circuit-breakers 24 kV

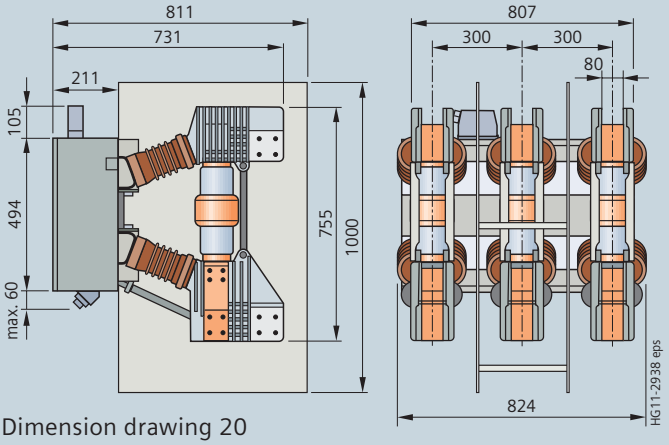

Dimension drawing 20

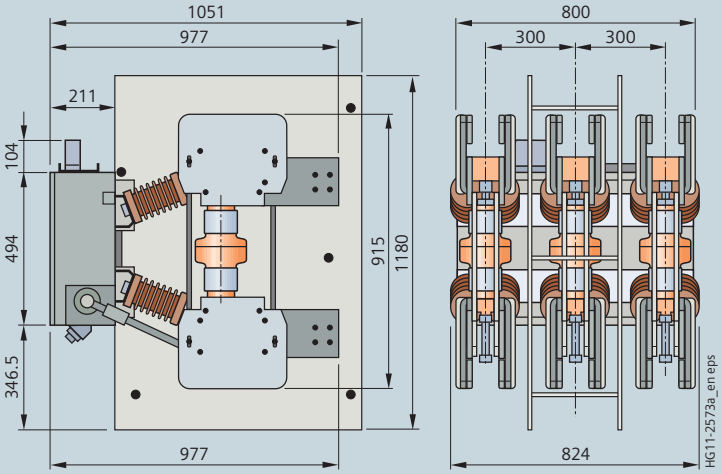

Dimension drawing 21

3

Circuit diagrams

The circuit diagrams shown here are examples from the manifold possibilities of circuit-breaker wiring.

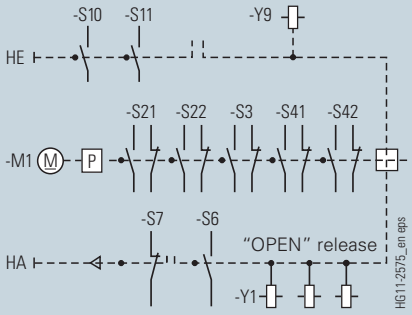

Manual closing – manual opening with auxiliary switch 6 NO + 6 NC

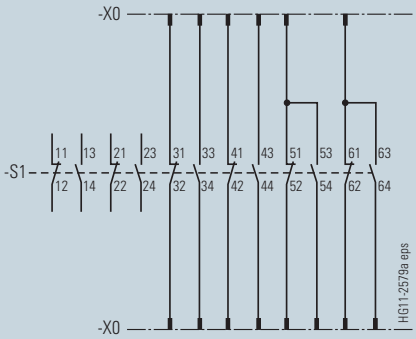

Contacts available for customer with basic circuit-breaker equipment and auxiliary switch 6 NO + 6 NC

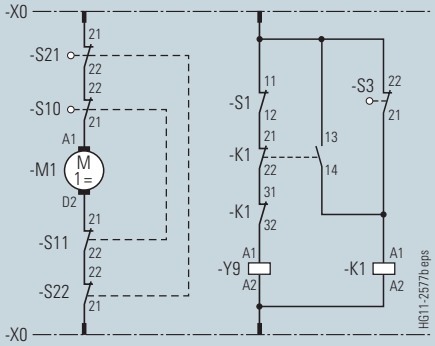

Motor operating mechanism with manual mechanical closing

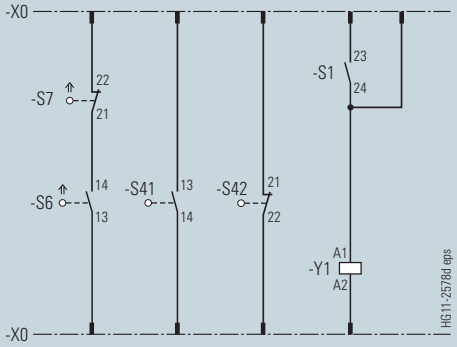

Circuit-breaker tripping signal

Signal "closing spring charged"

1st shunt release

3

Additional equipment: Motor operating mechanism with manual electrical closing

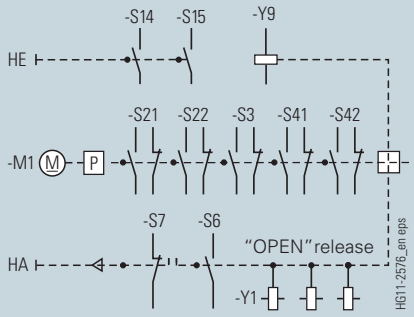

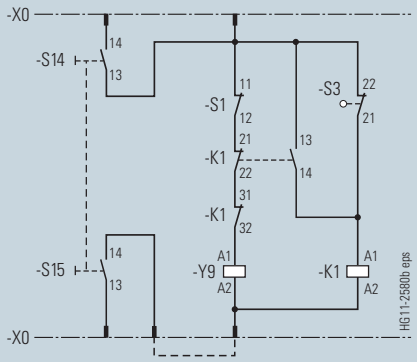

Manual electrical closing

Closing and anti-pumping

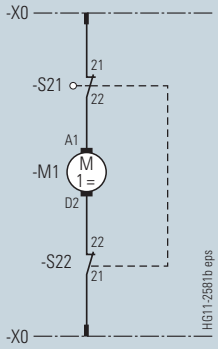

Motor operating mechanism

Additional equipment: Auxiliary switch

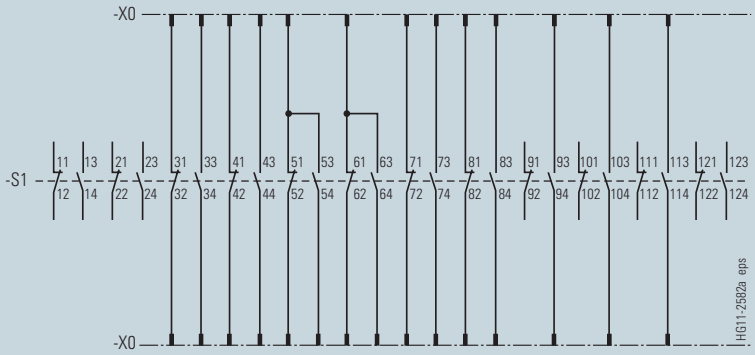

Contacts available for customer with basic circuit-breaker equipment
Auxiliary switch –S1 (12 NO + 12 NC) instead of auxiliary switch 6 NO + 6 NC

Additional equipment: Releases

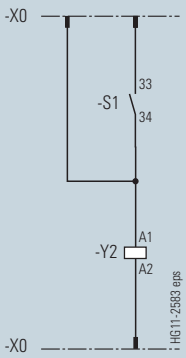

2nd shunt release

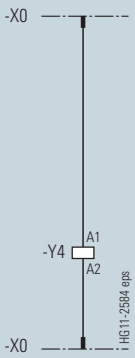

C.t.-operated release 0.5 A or 1 A

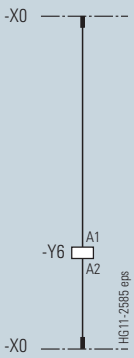

Low-energy c.t.-operated release 0.1 Ws

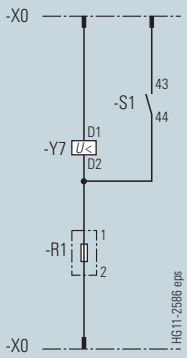

Undervoltage release

Legend (valid for pages 50 and 51)

HA	Manual opening
HE	Manual closing
K1	Contactor (anti-pumping)
M1	Motor operating mechanism
P	Energy store
R1	Resistance
S1	Auxiliary switch
S3	Position switch (opens when closing spring is charged)
S6	Circuit-breaker tripping signal
S7	Cutout switch for circuit-breaker tripping signal
S10, S11	Anti-pumping for manual closing
S14, S15	Manual electrical closing
S21, S22	Position switches (to de-energize the motor operating mechanism after charging)
S41, S42	Position switches (to indicate the charging state)
X0	Lower part of plug/ terminal strip
Y1	1st shunt release
Y2	2nd shunt release
Y4	Current-transformer operated release
Y6	Low-energy current-transformer operated release
Y7	Undervoltage release
Y9	Closing solenoid

3

Operating times

Operating times at rated voltage of the secondary circuit	Equipment of circuit-breaker	Operating time of circuit-breaker
Closing time	–	< 75 ms [1]
Opening time	1st shunt release	< 60 ms [1]
	2nd and 3rd release	< 55 ms
Arcing time	–	< 15 ms
Break time	1st shunt release	< 75 ms
	2nd and 3rd release	< 70 ms
Dead time	–	300 ms
CLOSE/OPEN contact time	1st shunt release	< 90 ms
	2nd and 3rd release	< 70 ms
Minimum command duration	Closing solenoid	45 ms
	1st shunt release	100 ms
	2nd and 3rd release	20 ms
Pulse time for circuit-breaker tripping signal	1st shunt release	> 15 ms
	2nd and 3rd release	> 10 ms
Charging time for electrical operation	–	< 15 s
Synchronism error between the poles	–	≤ 2 ms

1) Shorter operating times on request.

Short-circuit protection of motors (fuse protection of drive motors)

Rated voltage of the motor	Operating voltage		Power consumption of the motor		Smallest possible rated current [2] of the m.c.b. (miniature circuit-breaker) with C-characteristic
V	max. V	min. V	W (at DC)	VA (at AC)	A
24 DC	26	20	750	–	16
48 DC	53	41	750	–	10
60 DC	66	51	750	–	6
110 DC	121	93	1000	–	4
220 DC	242	187	1000	–	2
110 AC	121	93	–	1000	6
230 AC	244	187	–	1000	3

2) The current inrush in the drive motor can be neglected due to its very short presence.

Consumption data of releases

Release	Power consumption		Operating ranges for IEC 62271-100 circuit-breaker [4]	
	Operation at		Tripping voltage	Tripping voltage or tripping current
	DC approx. W	AC 50/60 Hz approx. VA	at DC	at AC 50/60 Hz
Closing solenoid 3AY15 10	140	140	85 to 110 % U	85 to 110 % U
1st shunt release (without energy store) 3AY15 10	140	140	70 to 110 % U	85 to 110 % U
2nd shunt release (with energy store) 3AX11 01	60	60	70 to 110 % U	85 to 110 % U
Undervoltage release 3AY11 03	20	20	35 to 0 % U	35 to 0 % U
Current-transformer operated release 3AX11 02 (rated normal current 0.5 or 1 A)	–	10 [3]	–	90 to 110 % I_a
Current-transformer operated release 3AX11 04 (tripping pulse ≥ 0.1 Ws)	–	–	–	–

3) Consumption at pickup current (90 % of the rated normal current) and open armature.

4) The operating ranges for generator circuit-breakers according to IEC/IEEE 62271-37-013 (3AH36, 37, 38) follow the the standard specification:

Table – Preferred values of supply voltages and their ranges for closing and opening devices and of auxiliary and control circuits of generator circuit-breakers

Direct current voltage ranges			Alternating current voltage ranges	
Preferred supply voltage U_a	Closing and auxiliary functions	Tripping functions	Preferred supply voltage U_a	Closing and auxiliary functions
V	V	V	V	V
48	36 – 56	28 – 56	120	104 – 127
110 – 125	90 – 140	70 – 140	240	208 – 254
220 – 250	180 – 280	140 – 280		

R-HG11-181.tif

Brandenburg Gate, Berlin, Germany

R-HG11-180.eps

Switchgear Factory in Berlin, Germany

Contents | Page

Annex 53

Inquiry form 54

Configuration instructions 55

Configuration aid Foldout page

4

Inquiry form

Please copy, fill in and return to your Siemens partner.

Inquiry concerning

☐ 3AH3 high-current circuit-breaker

☐ 3AH37/38 generator circuit-breaker

Please

☐ Submit an offer
☐ Call us
☐ Visit us

Your address

Company

Dept.

Name

Street

Postal code/city

Phone

Fax

E-mail

Siemens AG

Dept.

Name

Street

Postal code/city

Country

Fax

Technical data

				Other values
Rated voltage	☐ 7.2 kV ☐ 24 kV	☐ 12 kV ☐ 36 kV	☐ 17.5 kV ☐ 40.5 kV	☐ ___ kV
Rated lightning impulse withstand voltage	☐ 60 kV ☐ 125 kV	☐ 75 kV ☐ 170 kV	☐ 95 kV ☐ 195 kV	☐ 110 kV ☐ ___ kV
Rated short-duration power-frequency withstand voltage	☐ 20 kV ☐ 50 kV	☐ 32 kV ☐ 70 kV	☐ 36 kV ☐ 95 kV	☐ 38 kV ☐ ___ kV
Rated short-circuit breaking current	☐ 31.5 kA ☐ 63 kA	☐ 40 kA ☐ 72 kA	☐ 50 kA ☐ 80 kA	☐ 90 kA ☐ ___ kA
Rated normal current	☐ 1250 A ☐ 4000 A ☐ 10000 A	☐ 2000 A ☐ 5000 A ☐ 12000 A	☐ 2500 A ☐ 6300 A	☐ 3150 A ☐ 8000 A ☐ ___ A
Pole-centre distance	☐ 210 mm	☐ 275 mm	☐ 300 mm	☐ 350 mm

Secondary equipment

For possible combinations see pages 19 to 26

Circuit-breaker equipment	☐ Manual mechanical closing ☐ Manual electrical closing ☐ Manual operating mechanism			
Motor operating mechanism	☐ ___ V DC		☐ ___ V AC, ___ Hz	
Closing solenoid	☐ ___ V DC		☐ ___ V AC, ___ Hz	
1st shunt release	☐ ___ V DC		☐ ___ V AC, ___ Hz	
2nd shunt release	☐ ___ V DC		☐ ___ V AC, ___ Hz	
3rd shunt release	☐ ___ V DC		☐ ___ V AC, ___ Hz	
Current-transformer operated release	☐ 0.5 A	☐ 1 A	☐ ≥ 0.1 Ws (10 Ω)	☐ ≥ 0.1 Ws (20 Ω)
Undervoltage release	☐ ___ V DC		☐ ___ V AC, ___ Hz	
	☐ Without energy store		☐ With energy store	
Auxiliary switch	☐ 6 NO + 6 NC	☐ 12 NO + 12 NC		
Low-voltage connection	☐ 24-pole terminal strip	☐ 24-pole plug	☐ 64-pole plug	
☐ Mechanical interlocking				
Operating instructions	☐ English	☐ German	☐ French	☐ Spanish

Application and other requirements

☐ Please check off ___ Please fill in

You prefer to configure your 3AH3 vacuum circuit-breaker on your own?

Follow the steps to the configuration and enter the order number in the configuration aid.
Or you may also use our online configuration tool on our homepage:
https://mall.industry.siemens.com/mall/en/de/Catalog/Configurators

Instruction for configuration of the 3AH3 vacuum circuit-breaker

1st step: Definition of the primary part (see pages 15 to 18)

Please specify the following ratings:	Possible options:
Rated voltage (U_r)	U_r: 7.2 kV to 40.5 kV
Rated lightning impulse withstand voltage (U_p)	U_p: 60 kV to 195 kV
Rated short-duration power-frequency withstand voltage (U_d)	U_d: 20 kV to 95 kV
Rated short-circuit breaking current (I_{sc})	I_{sc}: 31.5 kA to 90 kA
Rated normal current (I_r)	I_r: 1250 A to 12000 A
Pole-centre distance	210 mm to 350 mm

These ratings define the positions 4 to 8 of the order number.

2nd step: Definition of the secondary equipment (see pages 19 to 26)

Please specify the following equipment features:	Possible options:
Release combination (position 9)	Shunt release, current-transformer operated release and undervoltage release
Closing solenoid (position 10)	Operating voltages from 24 V DC to 240 V AC
Operating voltage of the releases (positions 11/12)	Operating voltages from 24 V DC to 240 V AC
Type of local closing (position 10)	Mechanical closing, manual electrical closing
Type of operating mechanism and operating voltage of a motor, if available (position 14)	Motor operating stored-energy mechanism with operating voltages from 24 V DC to 240 V AC
Number of auxiliary contacts (position 15)	6 NO + 6 NC, 12 NO + 12 NC
Design of the secondary connection (position 15)	24-pole terminal strip, 24-pole plug connector, 64-pole plug connector
Language of the documentation (position 16)	English, German, French, Spanish, other languages on request
Frequency of the operating voltage of the secondary equipment at AC (position 16)	50 Hz/60 Hz

These equipment features define the positions 9 to 16 of the order number.

3rd step: Do you have any further requirements concerning the equipment? (Please refer to page 27)

Your Siemens sales partner will be pleased to support you.

4

For configuration of your
3AH3 vacuum circuit-breaker

1	2	3	4	5	6	7	–	8	9	10	11	12	–	13	14	15	16		
3	A	H	3	■	■	■	–	■	■	■	■	■	–	■	■	■	■	–	Z
				See page 15	to		page 18		See page 19	See page 20	See page 21	See page 22		See page 23	See page 24	See page 25	See page 26		See page 27
3	A	H	3				–						–						
				+				+				+				+			
				+				+				+				+			
3	A	H	3				–						–						
				+				+				+				+			
				+				+				+				+			
3	A	H	3				–						–						
				+				+				+				+			
				+				+				+				+			
3	A	H	3				–						–						
				+				+				+				+			
				+				+				+				+			
3	A	H	3				–						–						
				+				+				+				+			
				+				+				+				+			
3	A	H	3				–						–						
				+				+				+				+			
				+				+				+				+			
3	A	H	3				–						–						
				+				+				+				+			
				+				+				+				+			

Published by
Siemens AG 2018

Energy Management Division
Medium Voltage & Systems
Nonnendammallee 104
13623 Berlin, Germany

For further information please contact
our Customer Support Center
Phone: +49 180 524 70 00
Fax: +49 180 524 24 71
E-mail: support.energy@siemens.com

Article No. EMMS-K1511-A031-A6-7600
Printed in Germany
Dispo 18301
PU 184/364 KG 09.18 0.4

Subject to changes and errors. The information given in this document only contains general descriptions and/or performance features which may not always specifically reflect those described, or which may undergo modification in the course of further development of the products.
The requested performance features are binding only when they are expressly agreed upon in the concluded contract.

2018